Sept. 29, 1931. E. A. LINK, JR 1,825,462

COMBINATION TRAINING DEVICE FOR STUDENT AVIATORS AND ENTERTAINMENT APPARATUS

Filed March 12, 1930 4 Sheets-Sheet 1

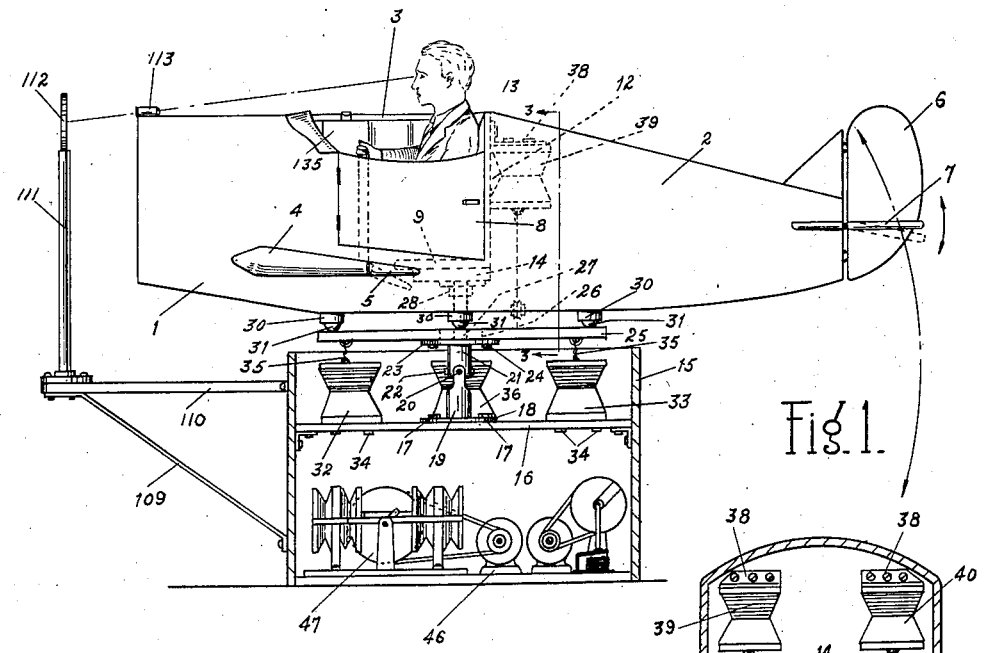

Fig. 1.

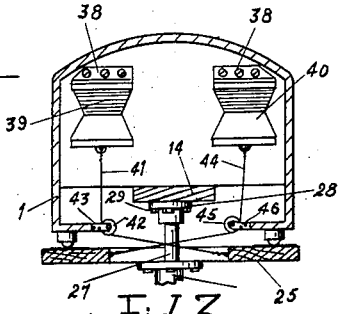

Fig. 3.

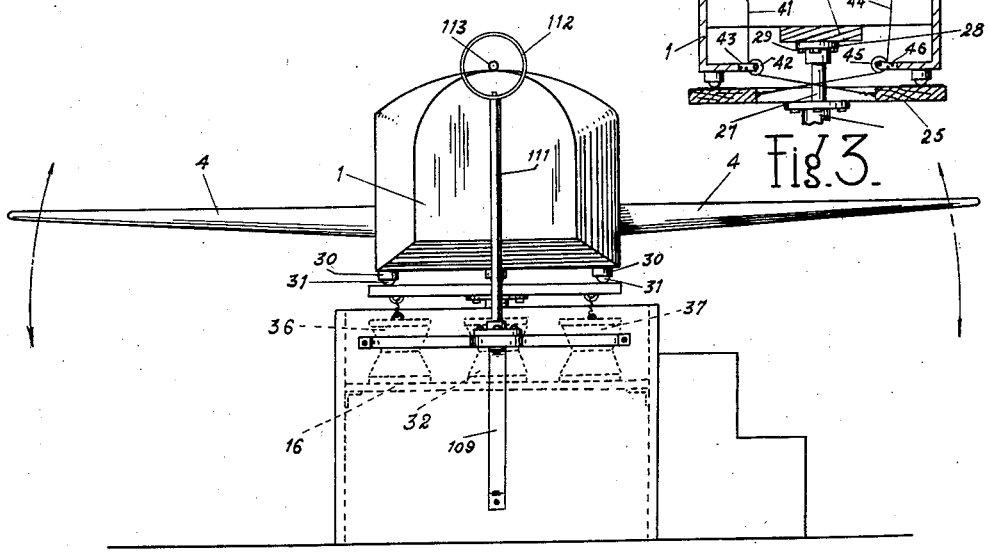

Fig. 2.

INVENTOR
EDWIN A. LINK, JR.
BY Philip S. Hopkins
ATTORNEY