July 15, 1952 R. E. WEILER ET AL 2,603,062

VARIABLE AREA JET NOZZLE

Filed Sept. 30, 1949 2 SHEETS—SHEET 1

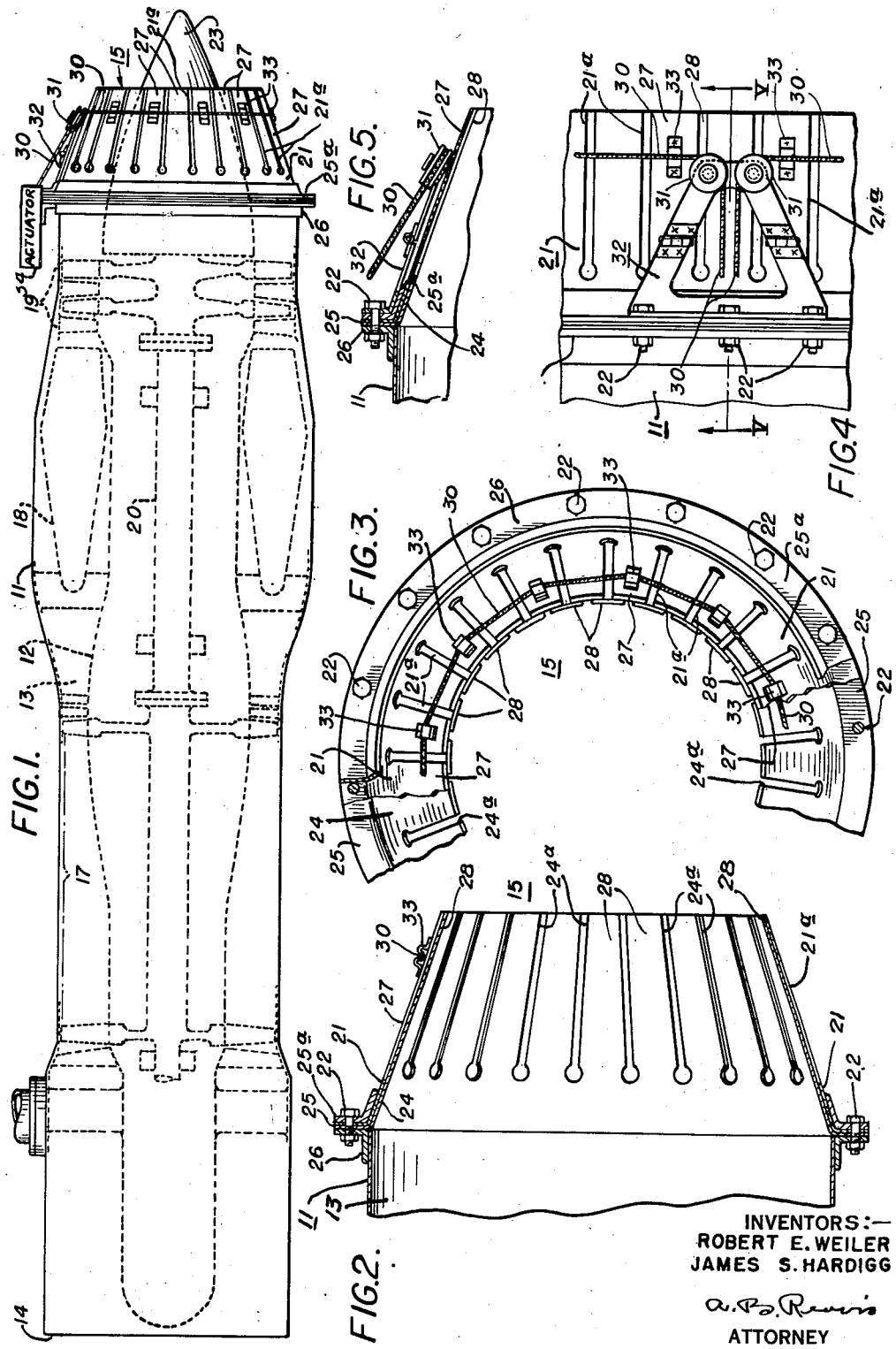

INVENTORS:—
ROBERT E. WEILER
JAMES S. HARDIGG

A. P. Rennie
ATTORNEY