Feb. 5, 1952

D. A. BECK ET AL

JET-PROPELLED AIRPLANE WITH JETTISONABLE WING TIP FUEL TANKS

Filed Sept. 8, 1945

2,584,961

Fig. 1

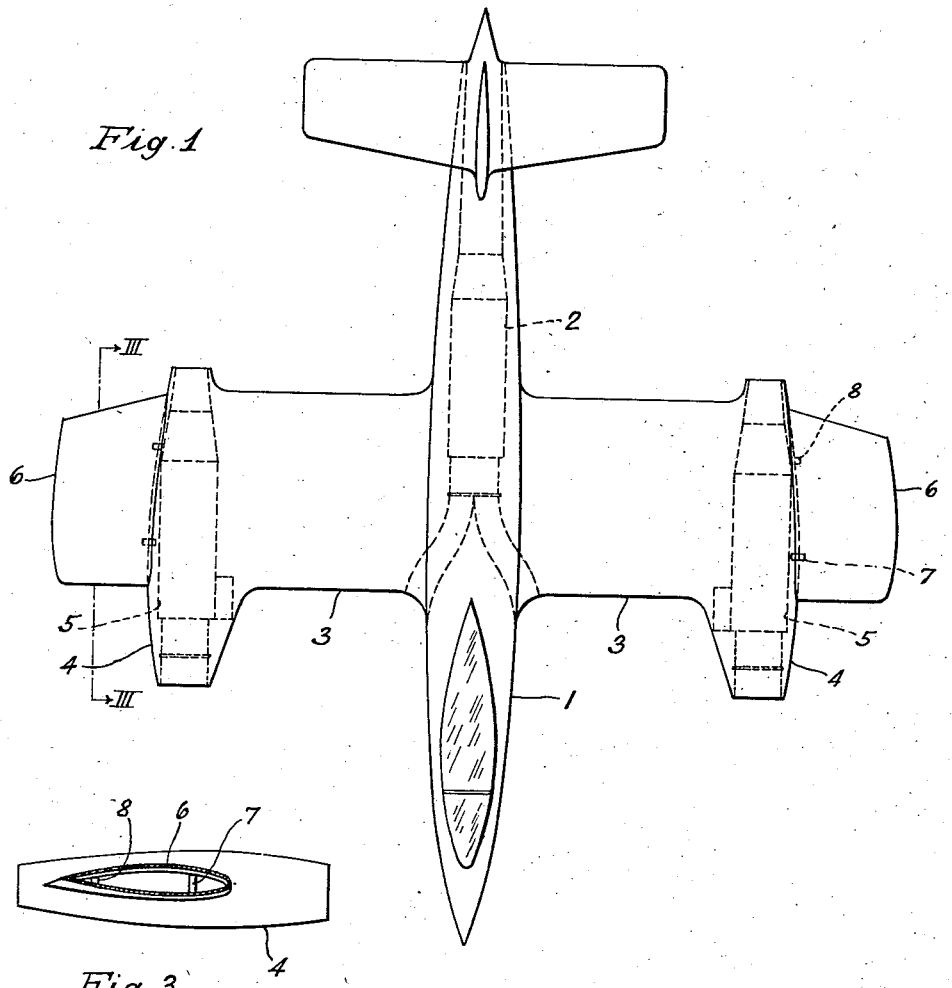

Fig. 3

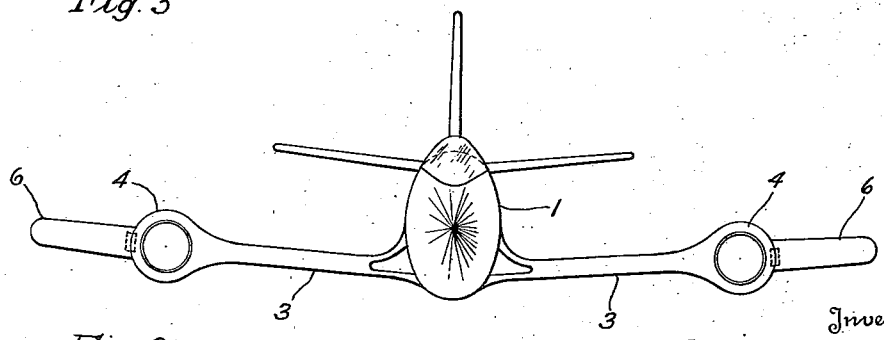

Fig. 2

Inventor

Derwood A. Beck

Edwyn A. Eddy

By A A Oldham

Attorney