Sept. 28, 1948. R. L. WEST 2,450,261

TRAINING EQUIPMENT FOR AVIATORS

Filed May 29, 1942 5 Sheets-Sheet 1

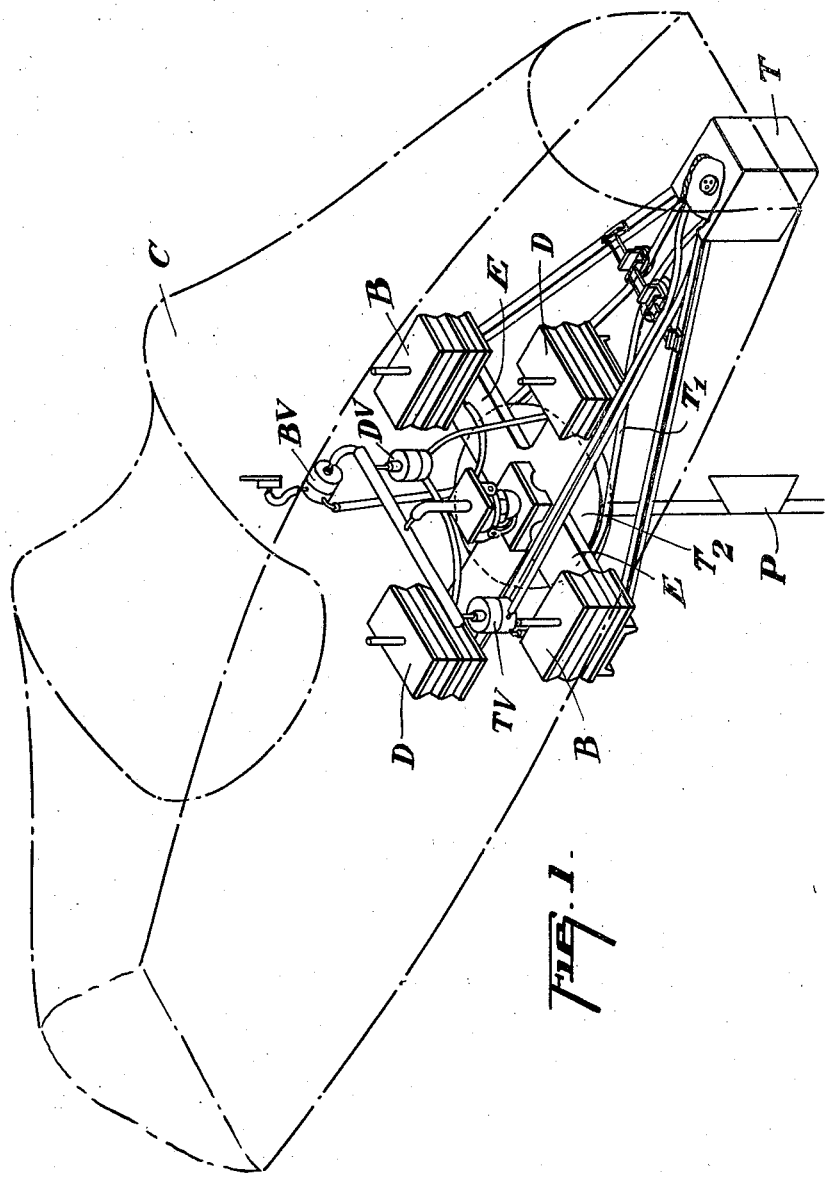

FIG. 1.

INVENTOR
RUSSELL L. WEST
Smart & Biggar
BY ATTORNEYS.