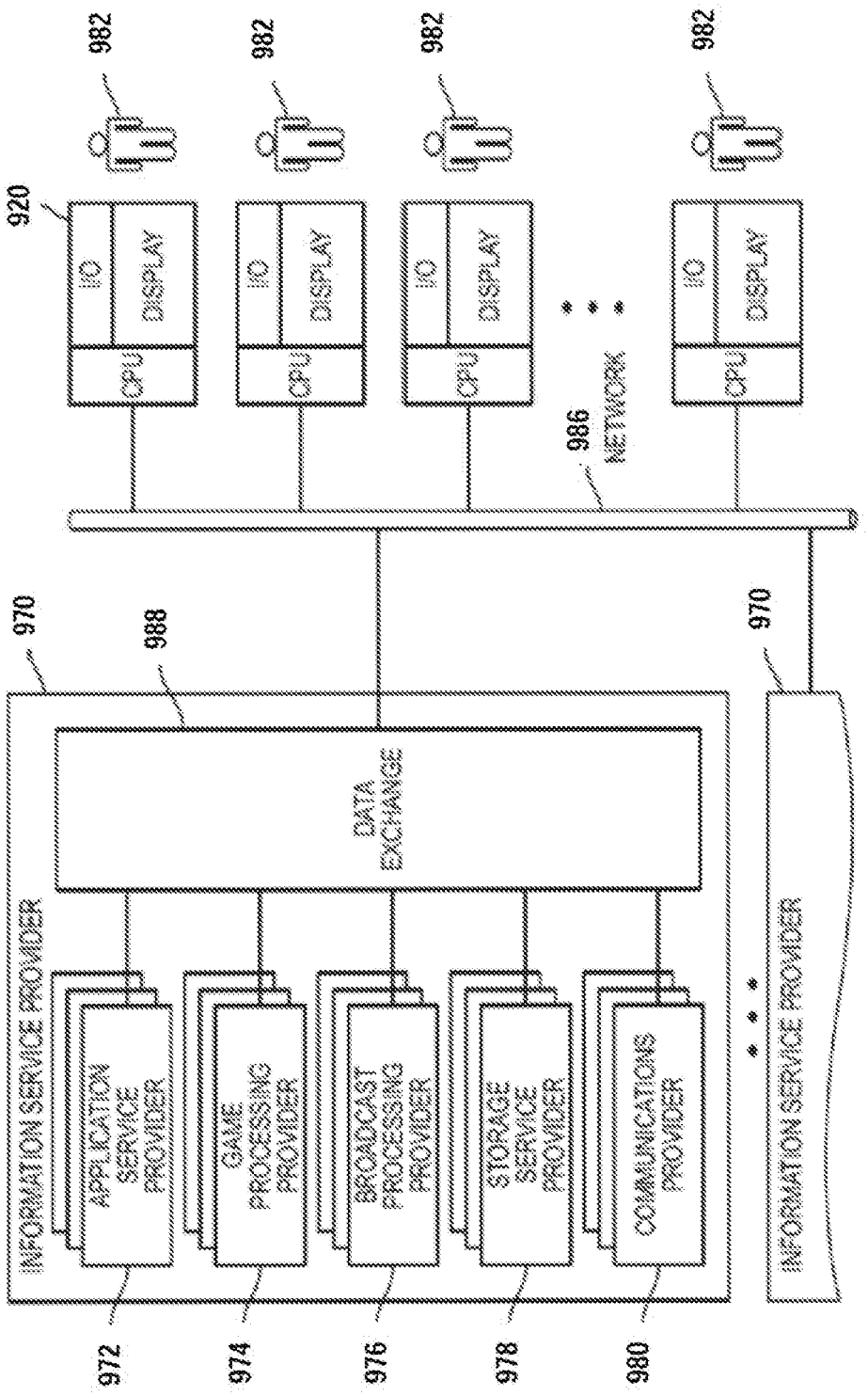
982
982
982
982
920
I/O
DISPLAY
CPU
I/O
DISPLAY
CPU
I/O
DISPLAY
CPU
I/O
DISPLAY
CPU
986
NETWORK
970
988
DATA EXCHANGE
INFORMATION SERVICE PROVIDER
APPLICATION SERVICE PROVIDER
GAME PROCESSING PROVIDER
BROADCAST PROCESSING PROVIDER
STORAGE SERVICE PROVIDER
COMMUNICATIONS PROVIDER
970
INFORMATION SERVICE PROVIDER
972
974
976
978
980

Fig. 5