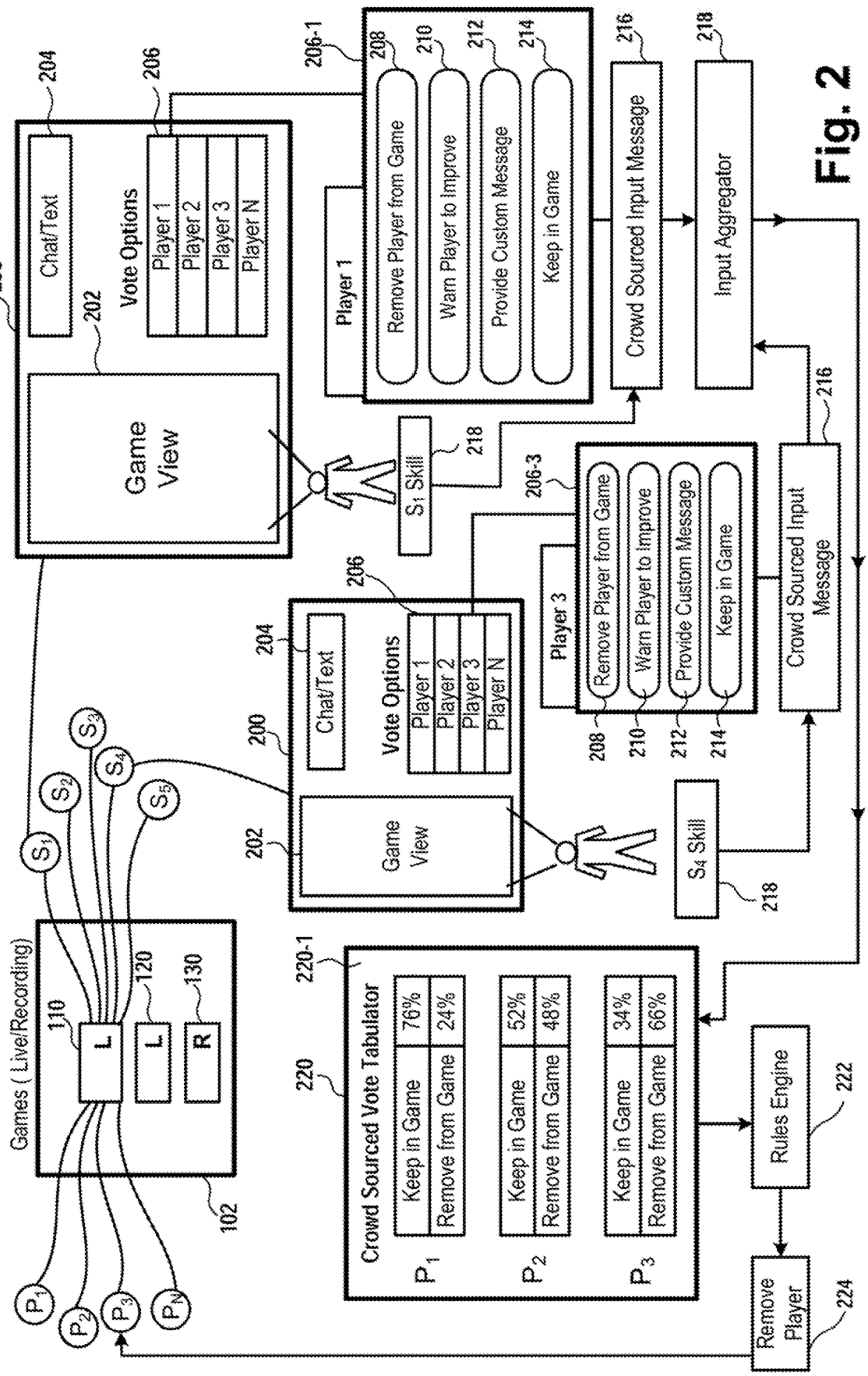
200
202
204
206
Chat/Text
Vote Options
Player 1
Player 2
Player 3
Player N
Game View
206-1
208
210
212
214
Remove Player from Game
Warn Player to Improve
Provide Custom Message
Keep in Game
Player 1
216
Crowd Sourced Input Message
218
Input Aggregator
S1 Skill
206-3
Player 3
S4 Skill
Games (Live/Recording)
110
120
130
L
R
102
S1
S2
S3
S4
S5
P1
P2
P3
PN
220
220-1
Crowd Sourced Vote Tabulator
Keep in Game
Remove from Game
76%
24%
52%
48%
34%
66%
Rules Engine
222
Remove Player
224

Fig. 2