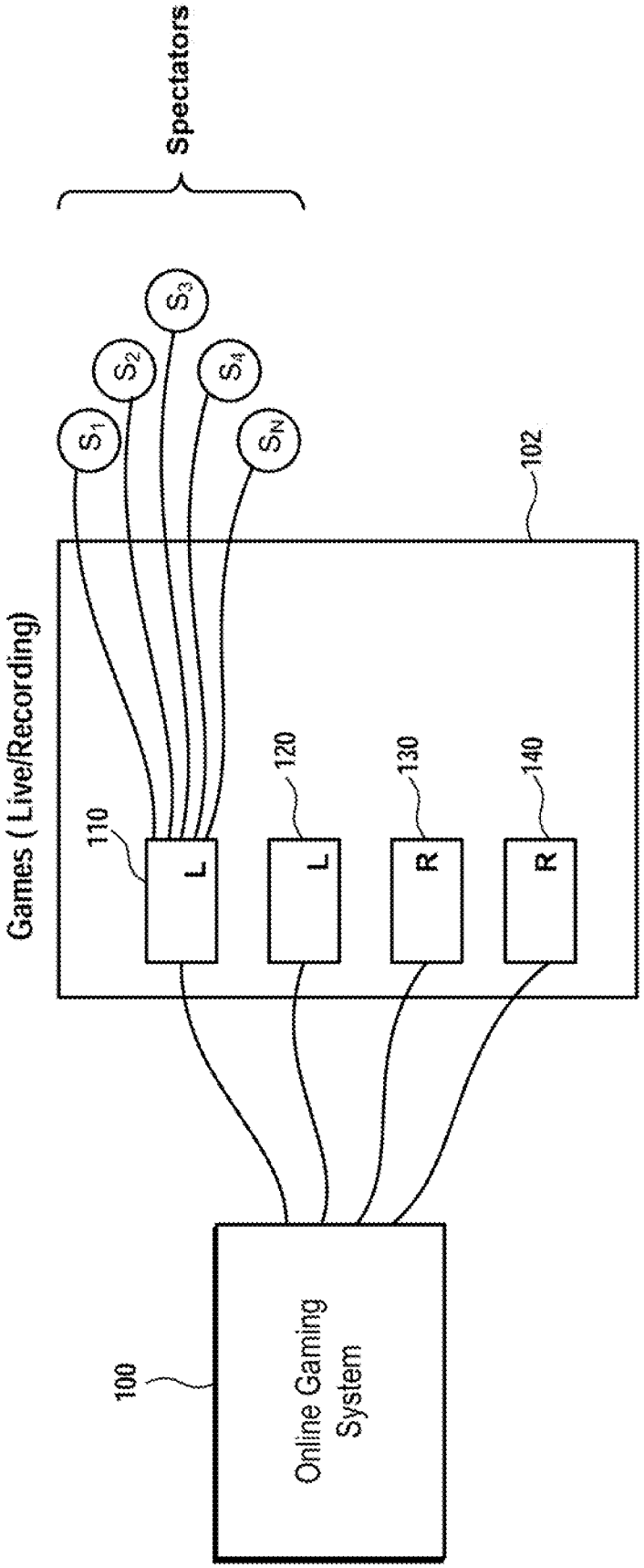
Spectators
S_1
S_2
S_3
S_4
S_N
102
Games (Live/Recording)
110
L
120
L
130
R
140
R
100
Online Gaming System

Fig. 1