CATHETERIZATION PACKAGE

Filed Sept. 3, 1965 3 Sheets-Sheet 1

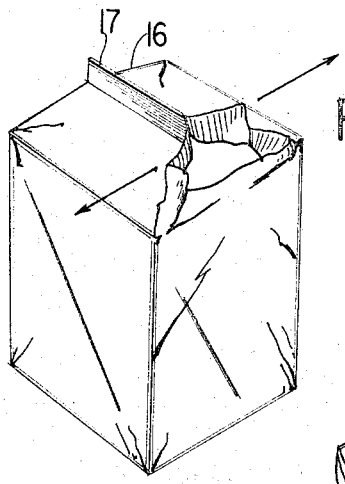

FIG. 1

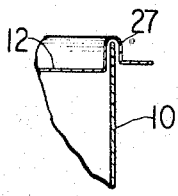

FIG. 4

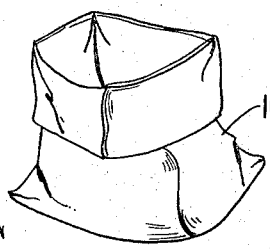

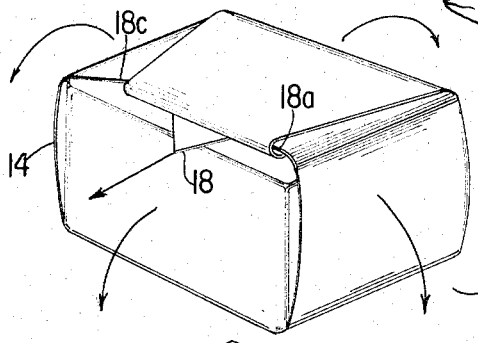

FIG. 2

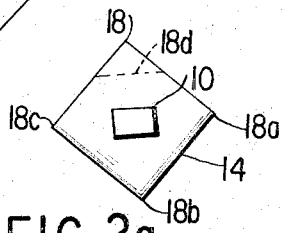

FIG. 2a

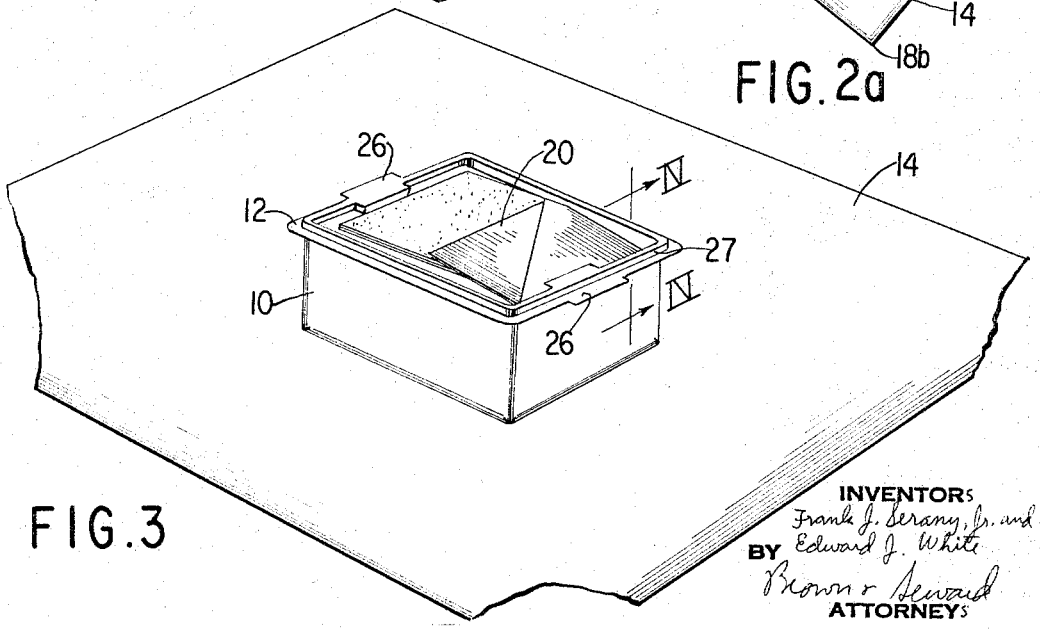

FIG. 3

INVENTORS
Frank J. Serany, Jr. and
Edward J. White
BY Brown & Seward
ATTORNEYS