Dec. 2, 1952 O. UXA 2,620,061

POCKET ARTICLE DISPENSING CONTAINER

Filed Oct. 14, 1949

Fig.1

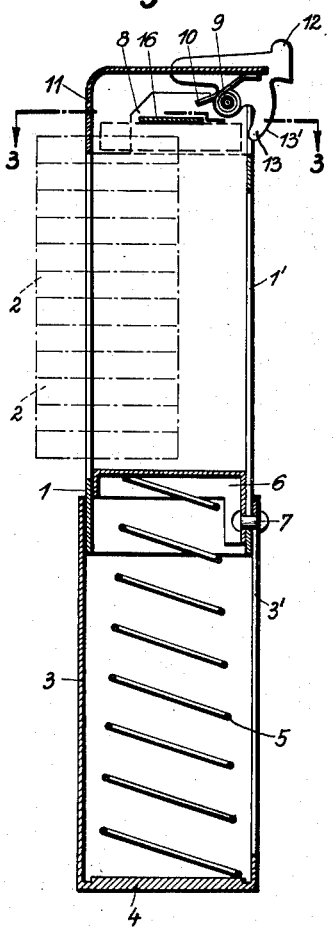

Fig.2

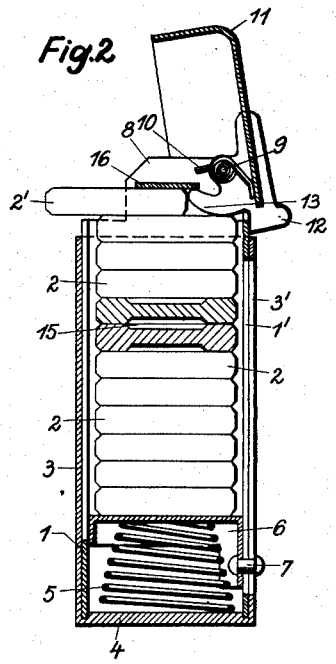

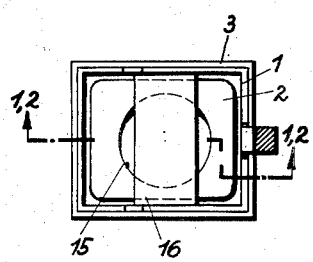

Fig.3

OSKAR UXA, INVENTOR.

BY [signature]

ATTORNEY