(No Model.)

H. S. MAXIM.

MACHINE GUN.

No. 317,161. Patented May 5, 1885.

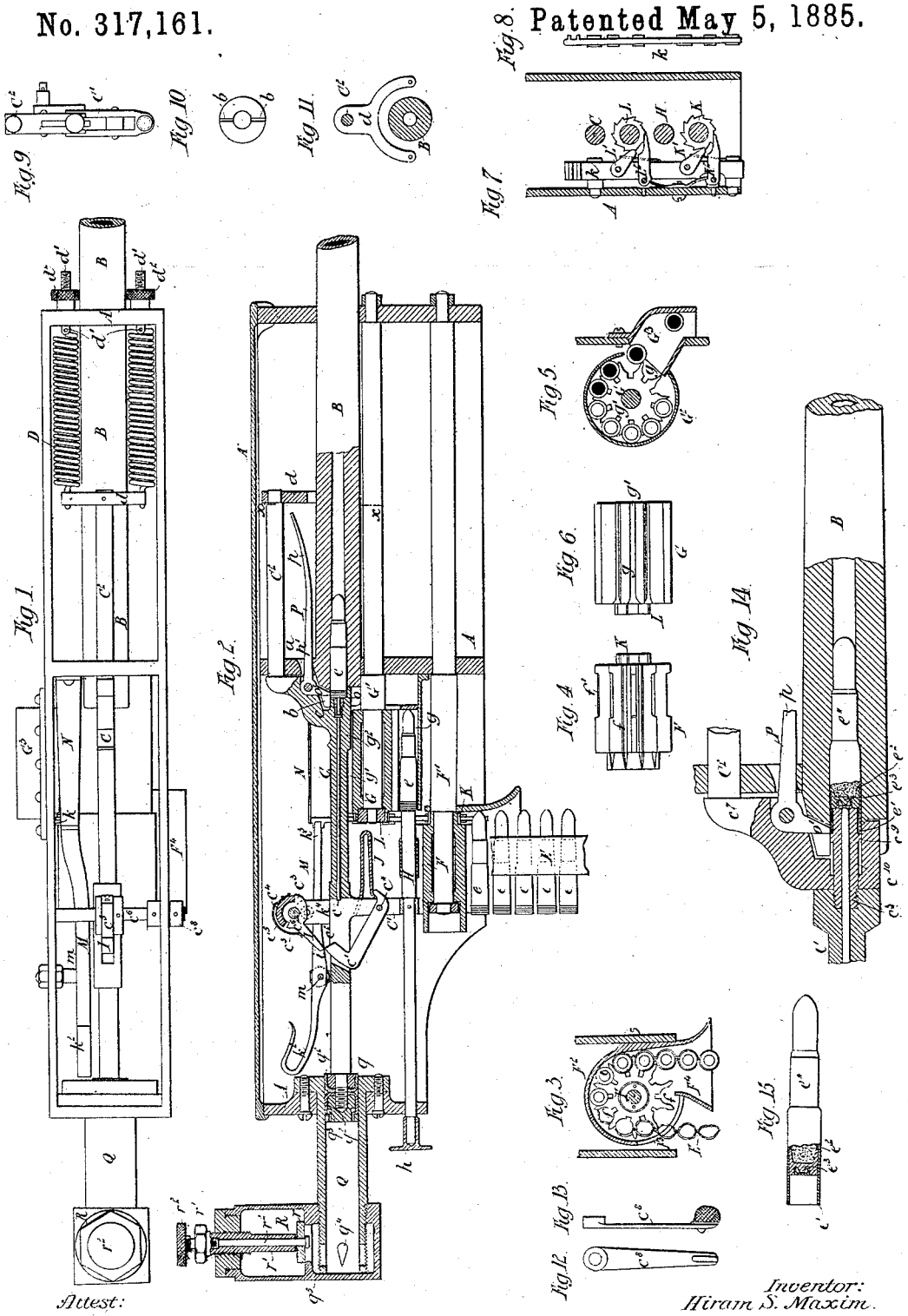

Attest:

H. D. Hartley

W. H. Doggett.

Inventor:
Hiram S. Maxim.

by his Att'y.

Parkers. Page.

N. PETERS, Photo-Lithographer, Washington, D. C.