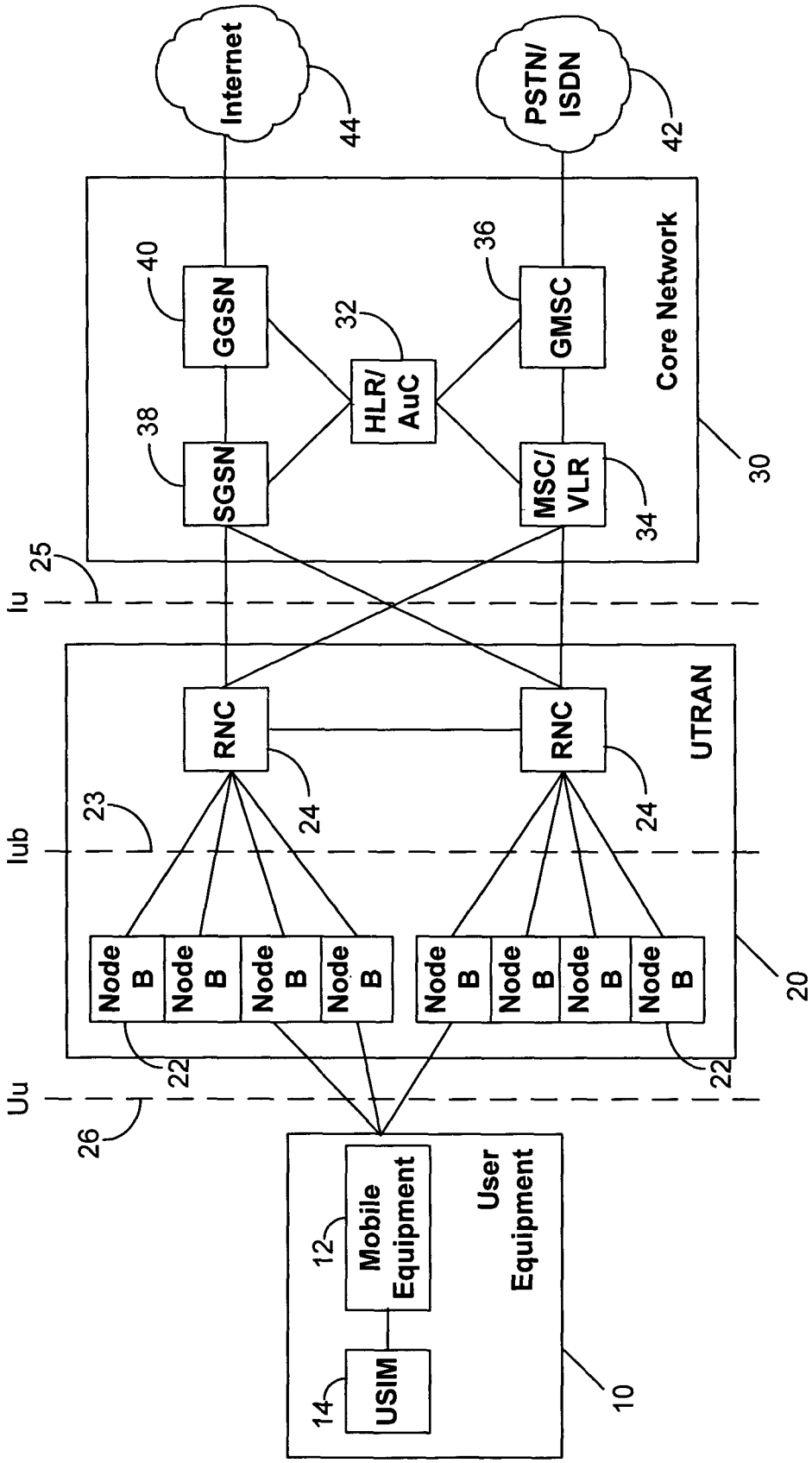
Internet
44
PSTN/
ISDN
42
40
GGSN
36
GMSC
32
HLR/
AuC
38
SGSN
MSC/
VLR
34
Core Network
30
25
Iu
RNC
24
RNC
24
UTRAN
23
Iub
Node
B
Node
B
Node
B
Node
B
Node
B
Node
B
Node
B
Node
B
20
22
22
Uu
26
Mobile
Equipment
12
User
Equipment
USIM
14
10

FIG. 1