US007484460B2

(12) **United States Patent**
Blum et al.

(10) **Patent No.: US 7,484,460 B2**
(45) **Date of Patent: Feb. 3, 2009**

(54) **AMUSEMENT RIDE TRACK WITH MOTION BASE**

(75) Inventors: **Steven C. Blum**, Orlando, FL (US); **Michael R. Kiddoo**, Orlando, FL (US); **Scott R. Trowbridge**, Windermere, FL (US)

(73) Assignee: **Universal City Studios LLLP**, Universal City, CA (US)

(*) Notice: Subject to any disclaimer, the term of this patent is extended or adjusted under 35 U.S.C. 154(b) by 181 days.

(21) Appl. No.: **11/240,414**

(22) Filed: **Sep. 30, 2005**

(65) **Prior Publication Data**

US 2007/0074638 A1 Apr. 5, 2007

(51) **Int. Cl.**
A63G 1/00 (2006.01)

(52) **U.S. Cl.** **104/53**; 472/59

(58) **Field of Classification Search** 440/53, 440/83, 85, 154; 472/59, 60, 130; 104/53, 104/83, 85, 154
See application file for complete search history.

(56) **References Cited**

U.S. PATENT DOCUMENTS

5,009,412	A *	4/1991	Roodenburg et al.	472/59
5,513,990	A *	5/1996	Gluck	472/60
5,711,670	A *	1/1998	Barr	472/60
6,095,926	A	8/2000	Hettema	
6,113,500	A	9/2000	Francis	
6,902,488	B2 *	6/2005	Hashimoto et al.	472/59
6,941,872	B2 *	9/2005	Roodenburg et al.	104/53
2005/0098056	A1 *	5/2005	Roodenburg et al.	104/53

FOREIGN PATENT DOCUMENTS

DE	20000558 U1	5/2000
DE	10049681 A1	4/2002

* cited by examiner

Primary Examiner—Lars A Olson
(74) *Attorney, Agent, or Firm*—Global Patent Operation

(57) **ABSTRACT**

An amusement ride has a track defining a ride vehicle path with a section of the track that can be decoupled from the main track and is subsequently movable on or about up to three axes with between one and six independent degrees of freedom.
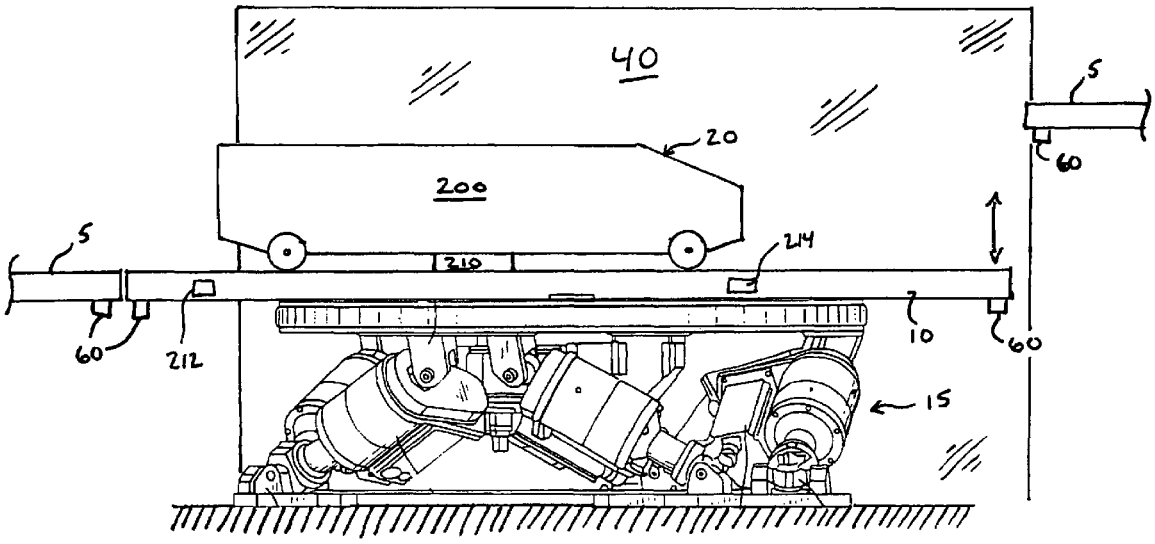
18 Claims, 4 Drawing Sheets