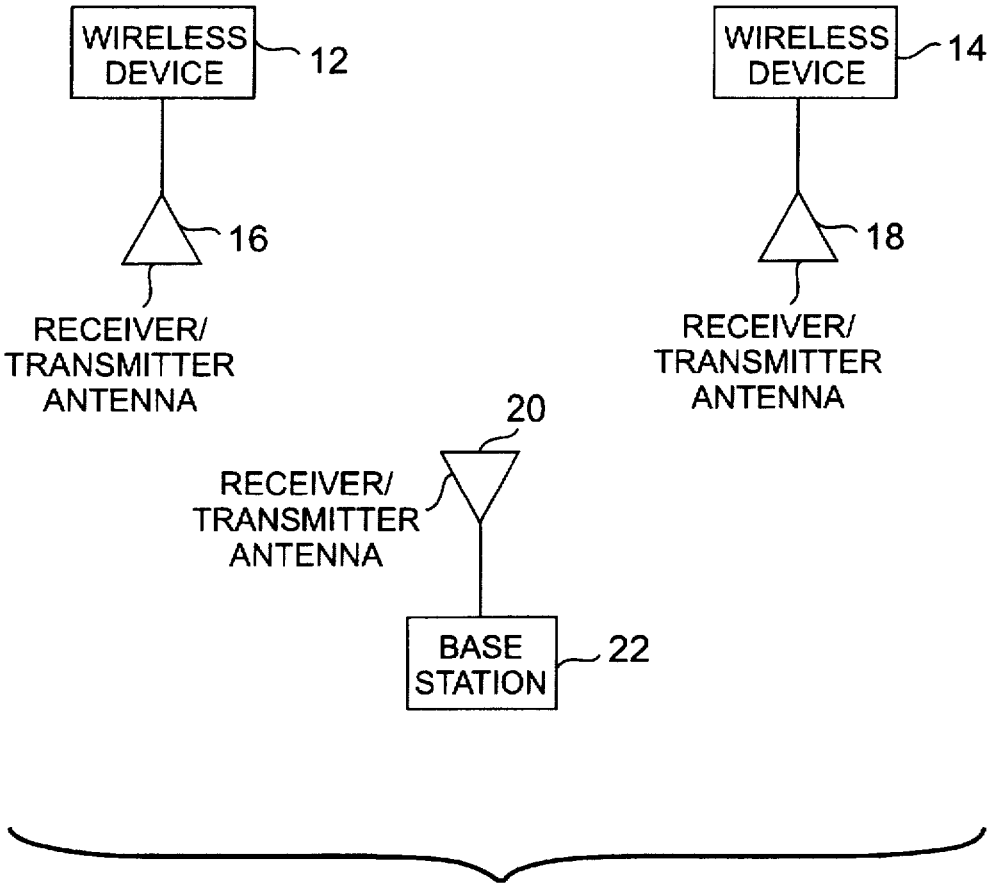
WIRELESS DEVICE
12
WIRELESS DEVICE
14
16
18
RECEIVER/ TRANSMITTER ANTENNA
RECEIVER/ TRANSMITTER ANTENNA
20
RECEIVER/ TRANSMITTER ANTENNA
BASE STATION
22

FIG. 1