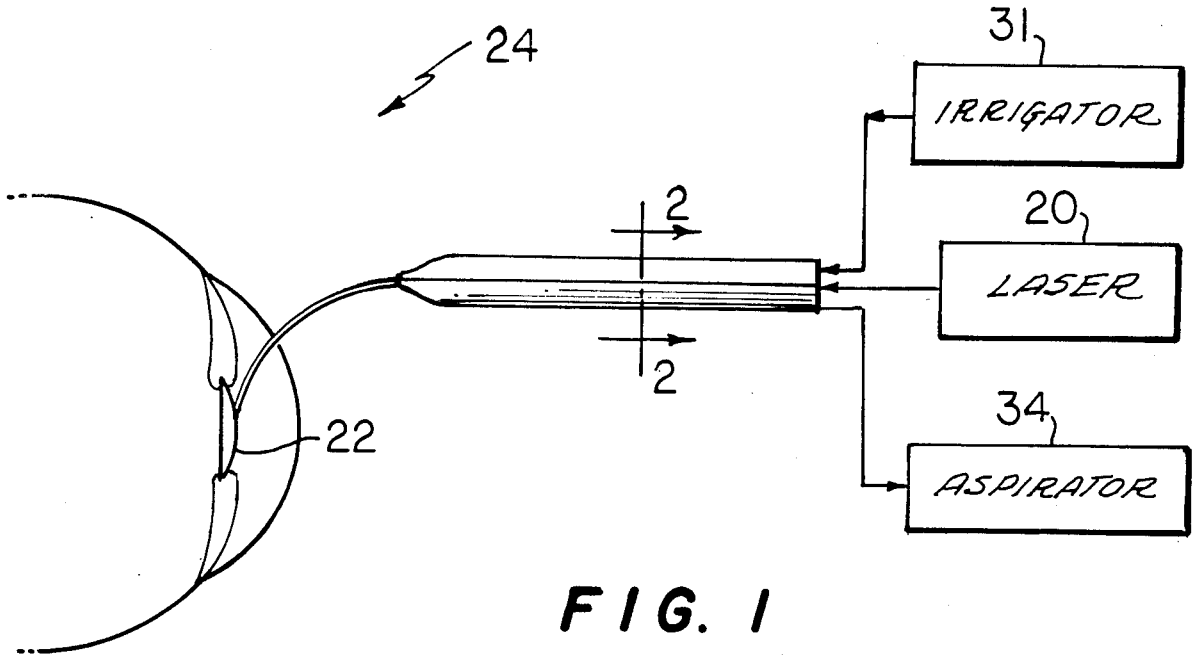
24
31
IRRIGATOR
2
20
LASER
2
34
22
ASPIRATOR

FIG. 1

FIG. 2

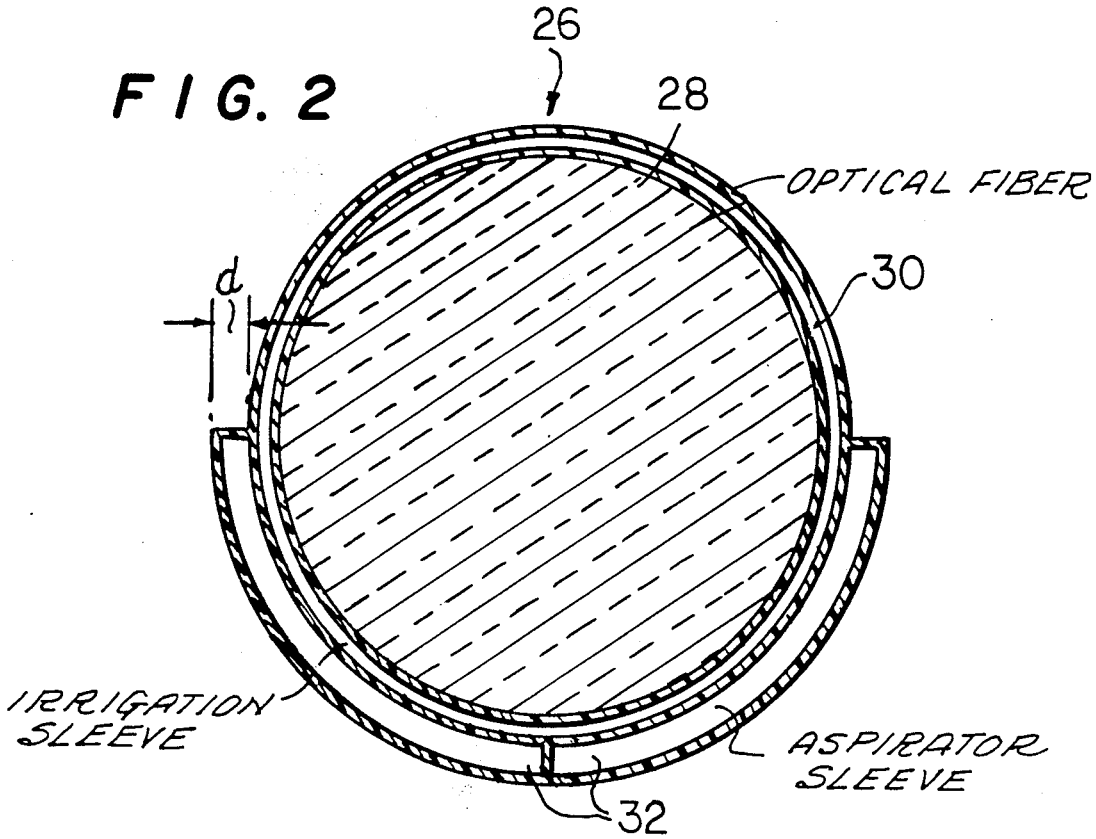
26
28
OPTICAL FIBER
d
30
IRRIGATION SLEEVE
ASPIRATOR SLEEVE
32