Aug. 2, 1927. 1,637,460

J. C. SPARROW

WINDOW REFRIGERATOR

Filed Feb. 9, 1925 2 Sheets-Sheet 1

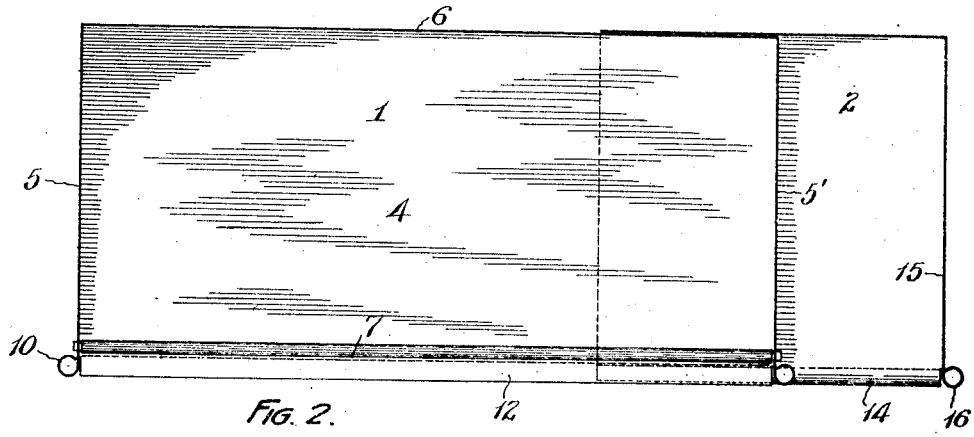

FIG. 2.

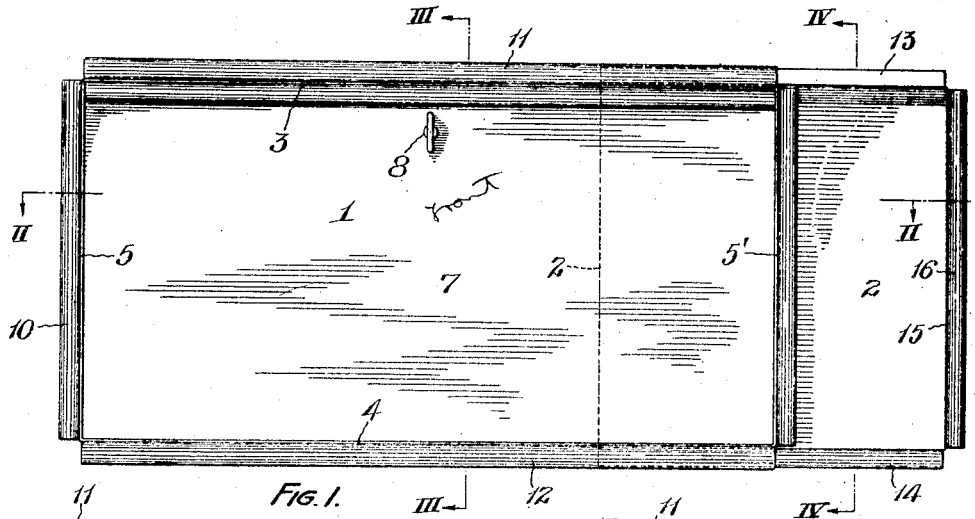

FIG. 1.

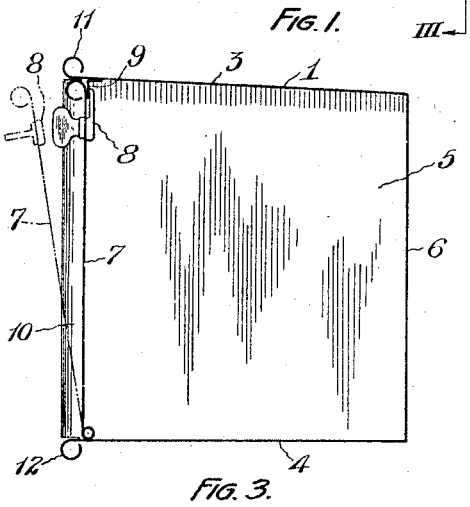

FIG. 3.

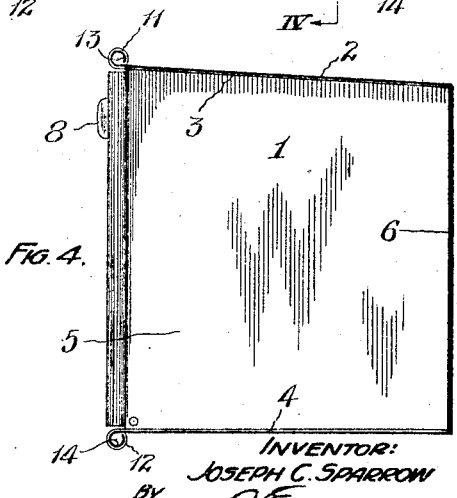

FIG. 4.

INVENTOR:
JOSEPH C. SPARROW
BY
A. E. Merkle,
ATTORNEY