(No Model.) 4 Sheets—Sheet 4.

G. B. BRAYTON.

HYDROCARBON ENGINE.

No. 432,260. Patented July 15, 1890.

Fig. 11.

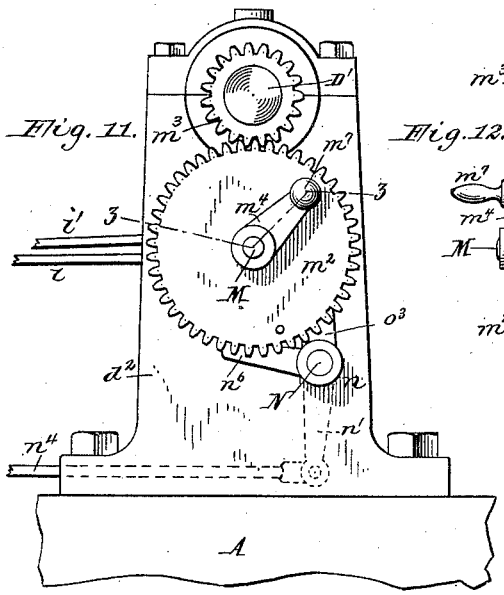

Fig. 12.

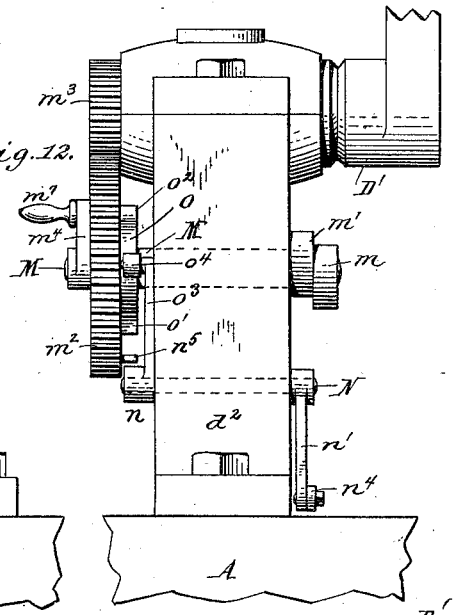

Fig. 13.

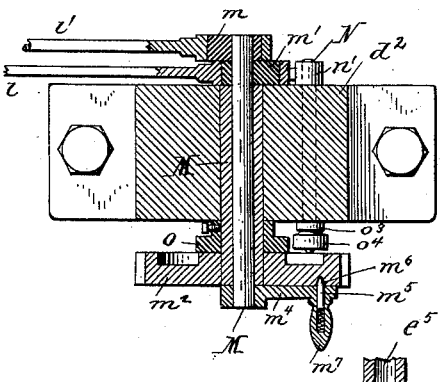

Fig. 14.

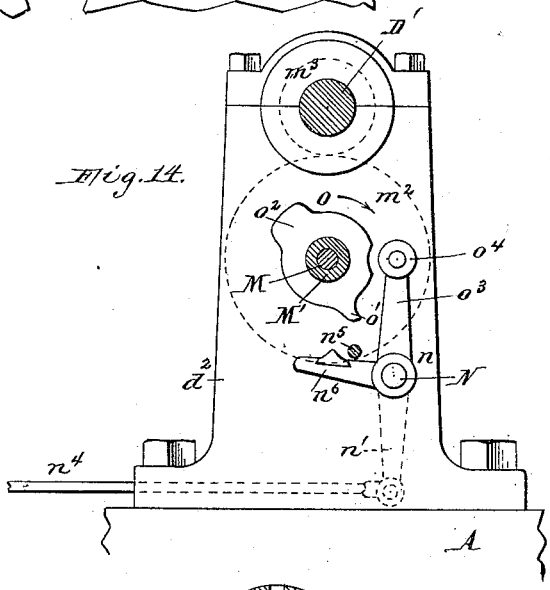

Fig. 15.

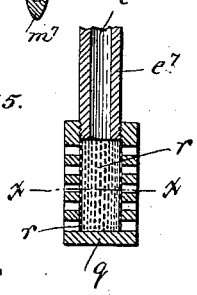

Fig. 16.

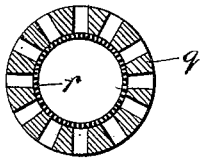

Witnesses:
Theo. L. Popp.
Chester D. Howe

George B. Brayton, Inventor.
By Edward Wilhelm
Attorney.

THE NORRIS PETERS CO., PHOTO-LITHO., WASHINGTON, D. C.