JET PROPULSION ENGINE WITH COOLED COMBUSTION CHAMBER, FUEL HEATER, AND INDUCED AIR-FLOW

Filed Aug. 3, 1966 4 Sheets-Sheet 4

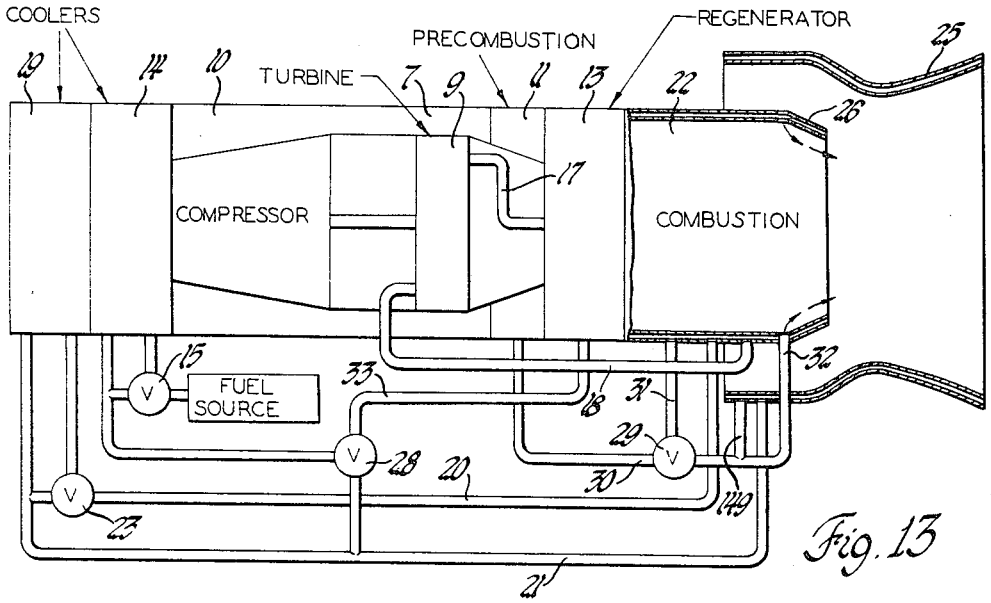

Fig. 13

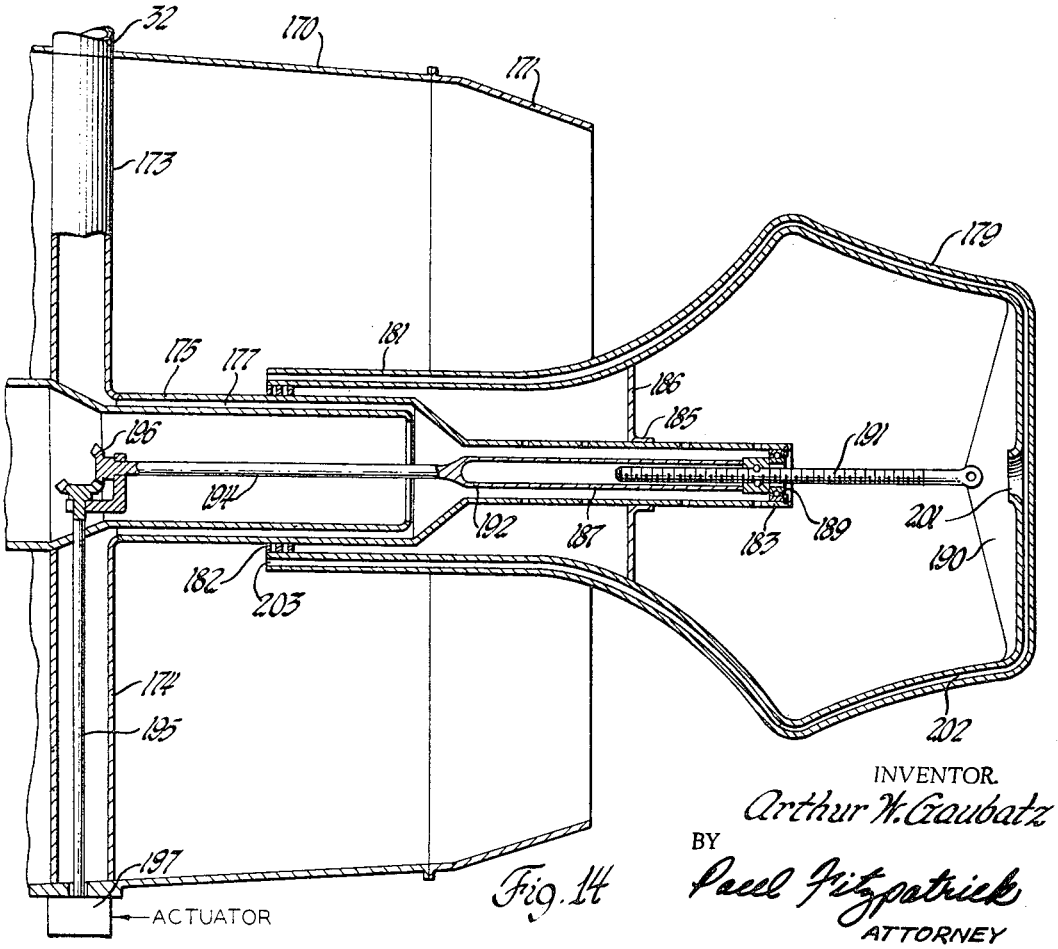

Fig. 14

INVENTOR.
Arthur W. Gaubatz
BY
Paul Fitzpatrick
ATTORNEY