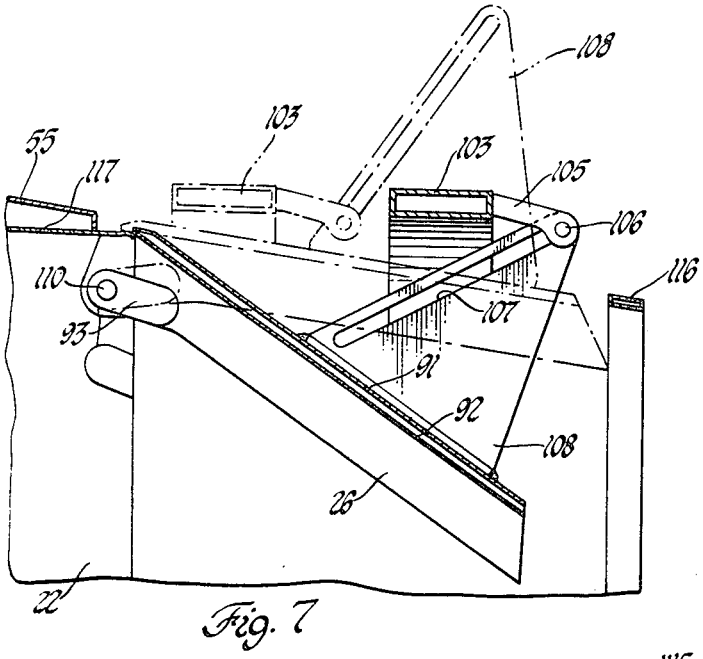

Fig. 7

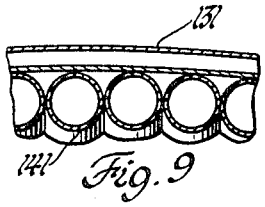

Fig. 9

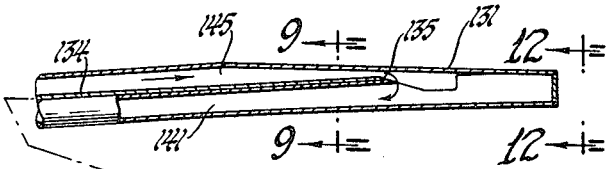

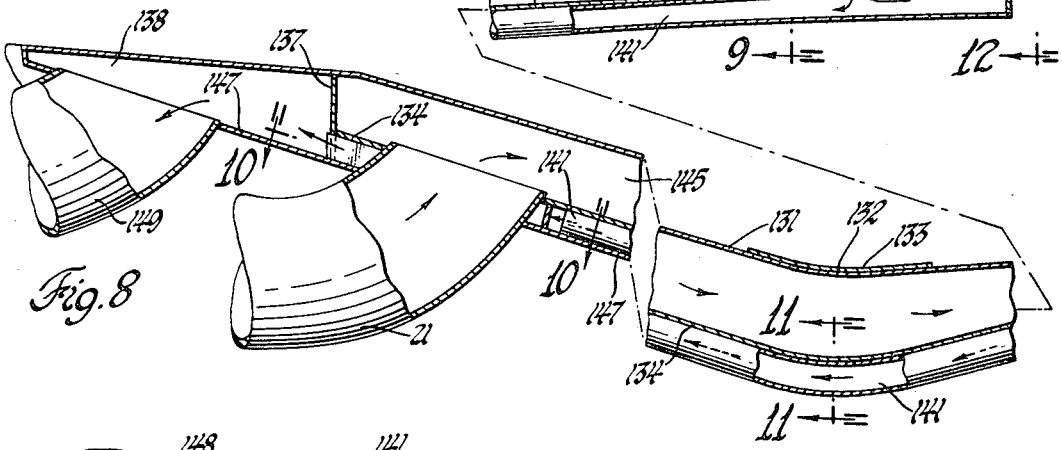

Fig. 8

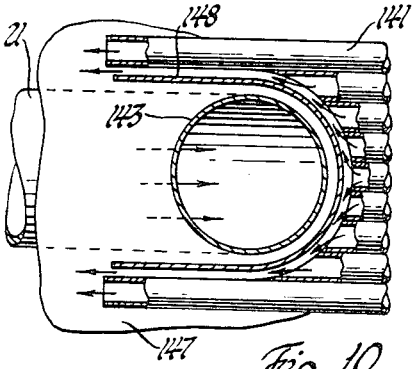

Fig. 10

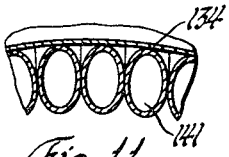

Fig. 11

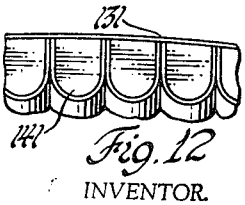

Fig. 12

INVENTOR.
Arthur W. Gaubatz
BY
Paul Fitzpatrick
ATTORNEY