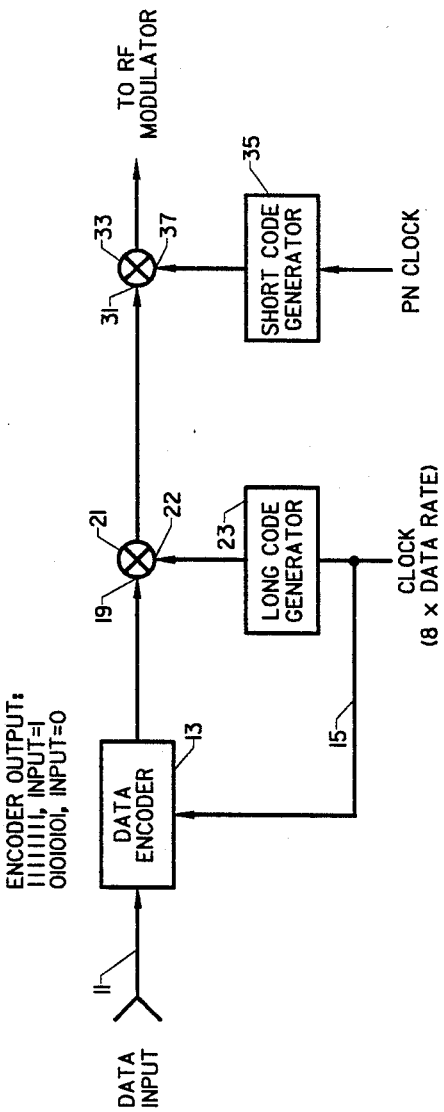
DATA INPUT
11
ENCODER OUTPUT:
1111111, INPUT=1
0101010, INPUT=0
DATA ENCODER
13
15
19
21
22
23
LONG CODE GENERATOR
CLOCK
(8 x DATA RATE)
31
33
37
35
SHORT CODE GENERATOR
PN CLOCK
TO RF MODULATOR

FIG. 1

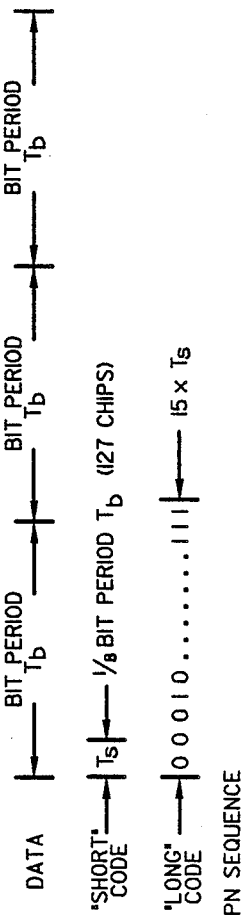
DATA
BIT PERIOD T_b
BIT PERIOD T_b
BIT PERIOD T_b
"SHORT" CODE
T_s
1/8 BIT PERIOD T_b (127 CHIPS)
"LONG" CODE
0 0 0 1 0 . . . . . 1 1 1
15 x T_s
PN SEQUENCE

FIG. 2