SWINGING SLIDE PANEL CONSTRUCTION

Filed Oct. 17, 1967 4 Sheets-Sheet 1

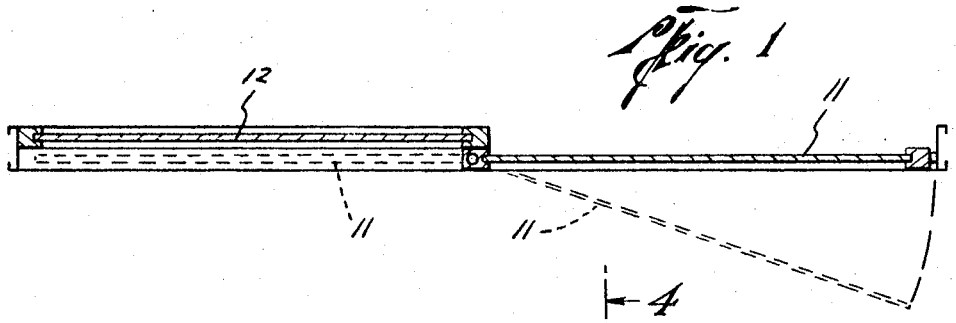

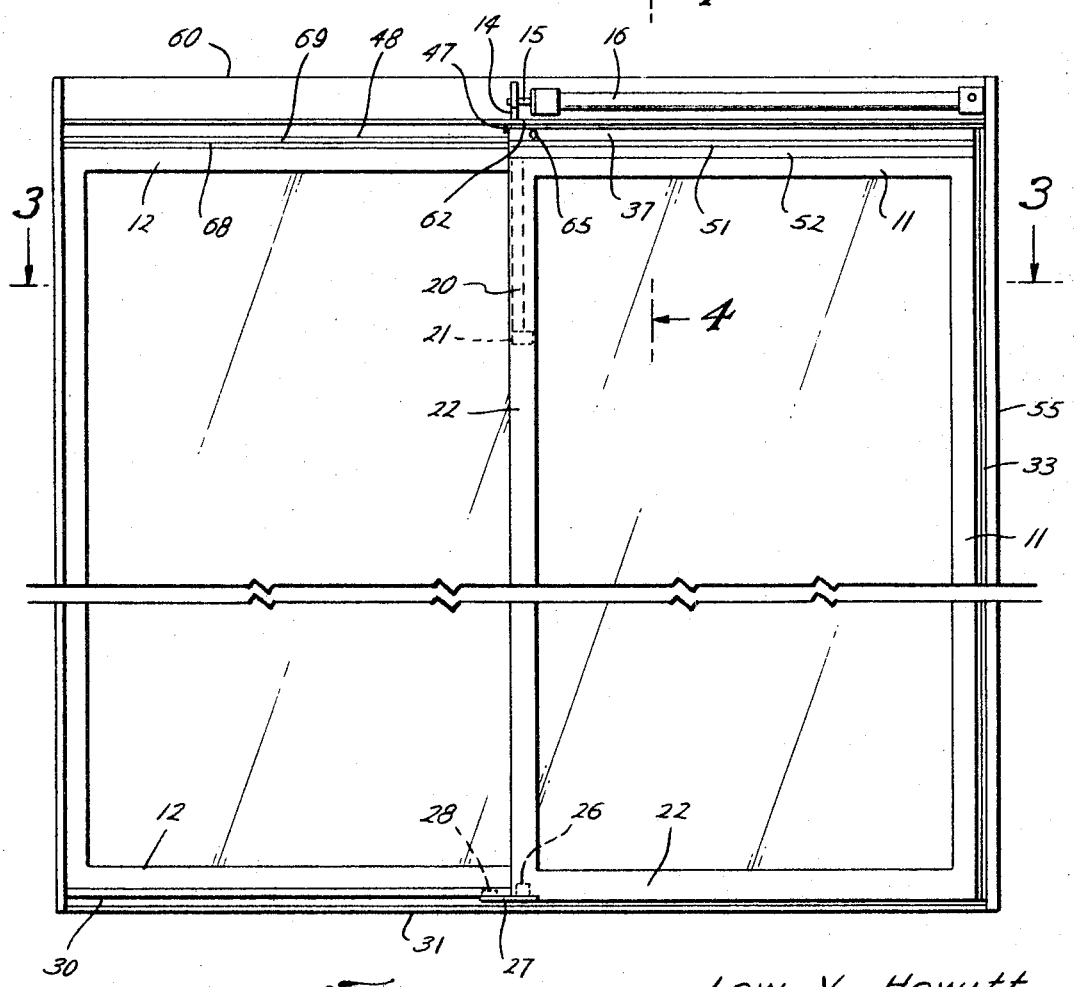

Fig. 2

Lew V. Hewitt
Dee D. Horton
INVENTORS

BY Lee R Larkin

ATTORNEY