Feb. 11, 1936. B. NEAL 2,030,759

COMPRESSOR UNIT

Filed Jan. 9, 1934 3 Sheets-Sheet 2

Fig. 2.

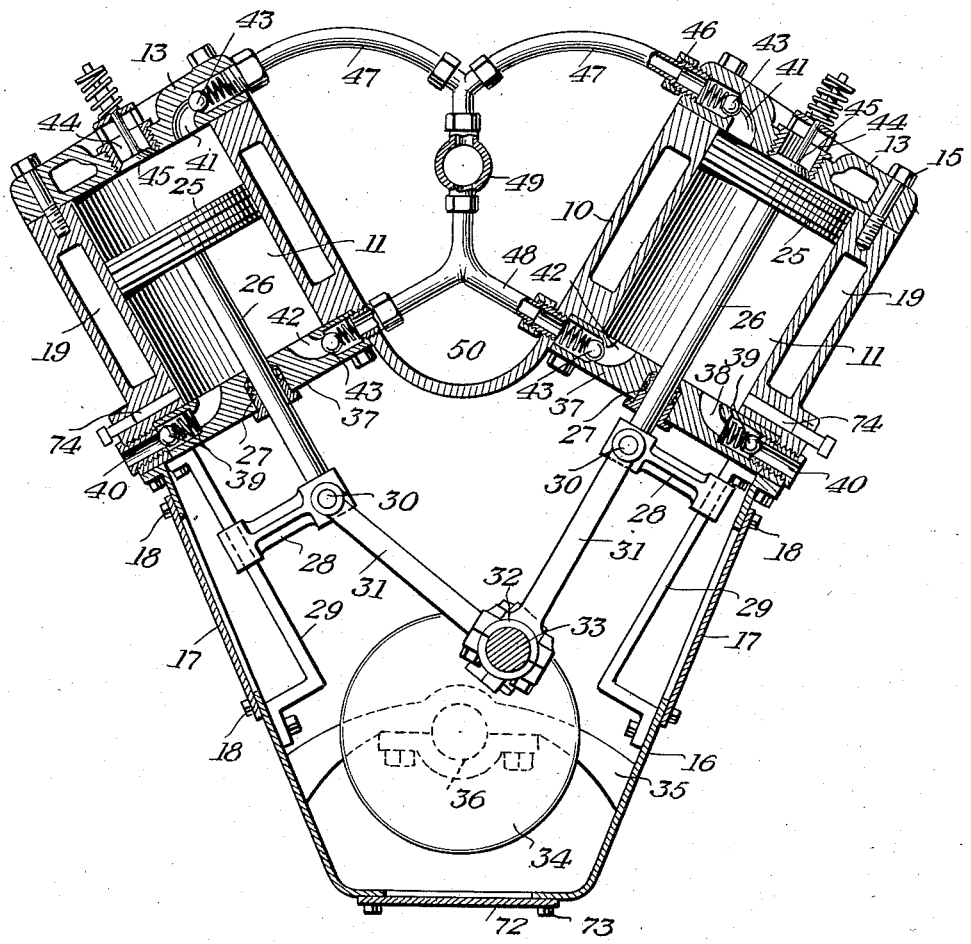

Fig. 4.

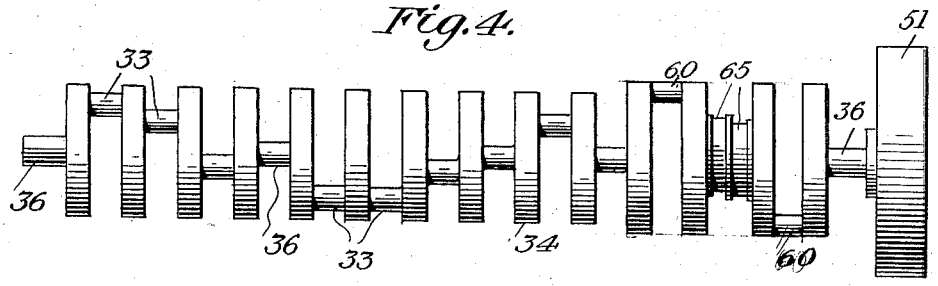

INVENTOR.

Bob Neal

BY

ATTORNEY.