N. TESLA.

VALVULAR CONDUIT.

APPLICATION FILED FEB. 21, 1916. RENEWED JULY 8, 1919.

1,329,559. Patented Feb. 3, 1920.

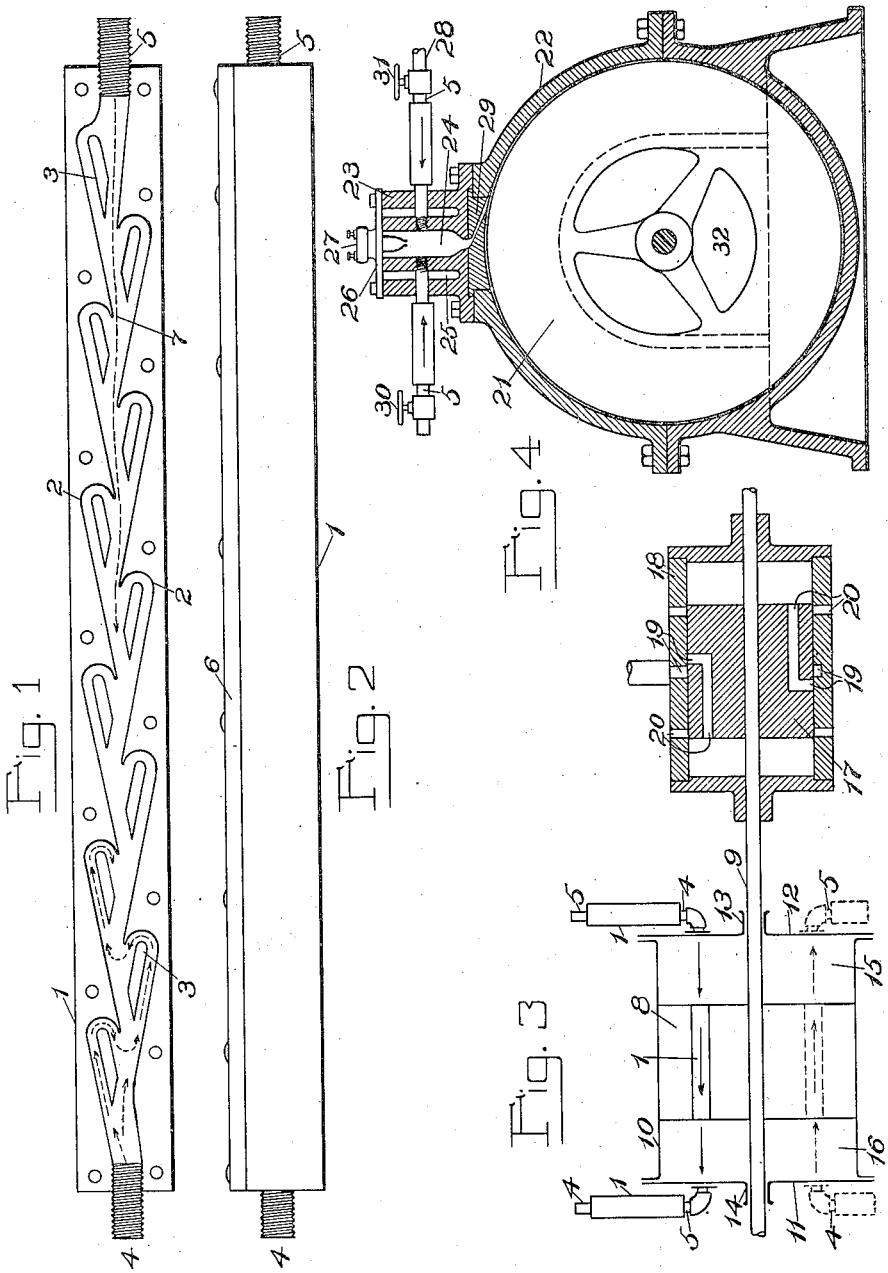

INVENTOR
Nikola Tesla
BY
Stern, Page, Cooper & Maynard
ATTORNEYS