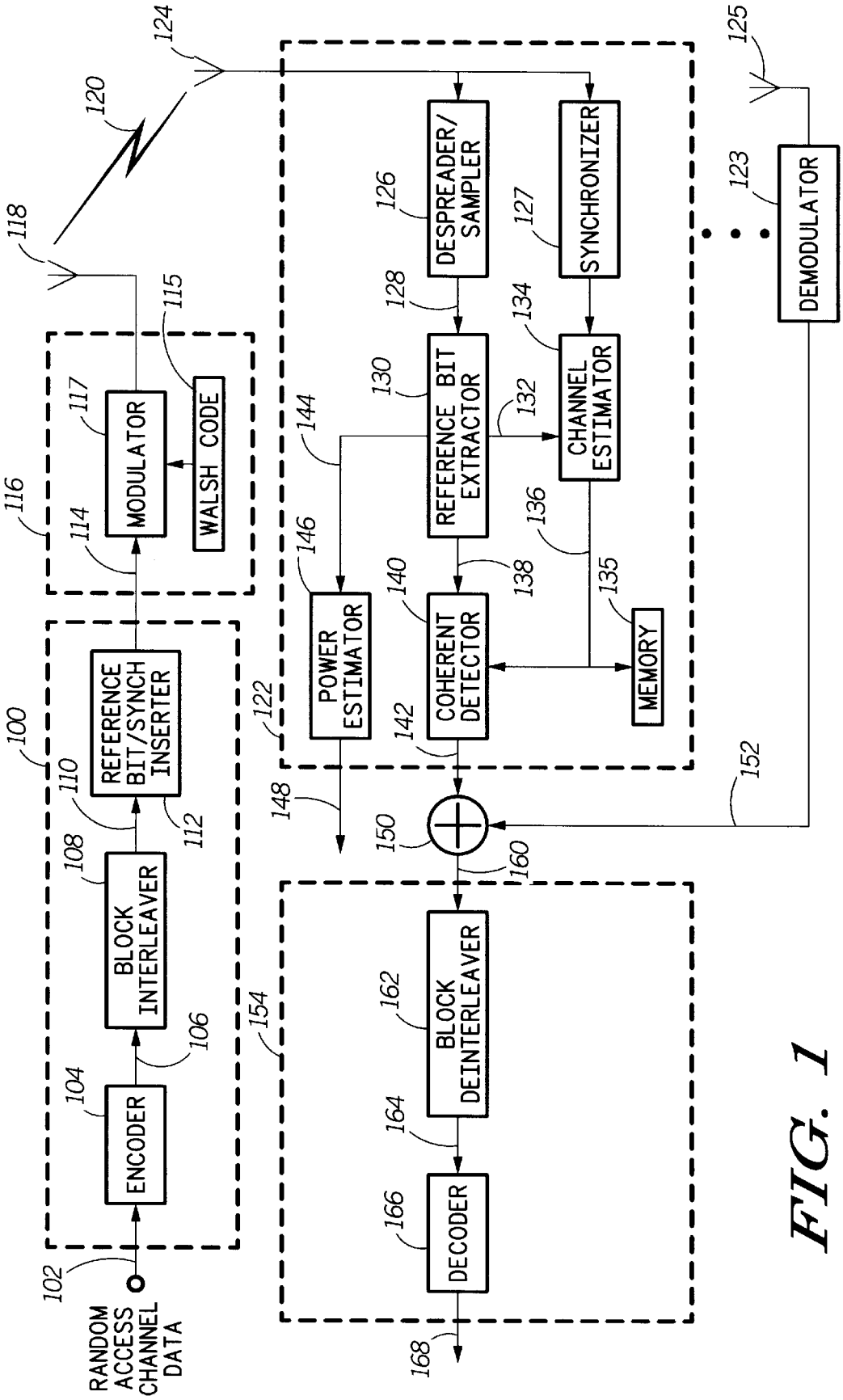
RANDOM ACCESS CHANNEL DATA
ENCODER
BLOCK INTERLEAVER
REFERENCE BIT/SYNCH INSERTER
MODULATOR
WALSH CODE
DESPREADER/ SAMPLER
SYNCHRONIZER
REFERENCE BIT EXTRACTOR
CHANNEL ESTIMATOR
POWER ESTIMATOR
COHERENT DETECTOR
MEMORY
DEMODULATOR
BLOCK DEINTERLEAVER
DECODER
100
102
104
106
108
110
112
114
115
116
117
118
120
122
123
124
125
126
127
128
130
132
134
135
136
138
140
142
144
146
148
150
152
154
160
162
164
166
168

FIG. 1