Aug. 22, 1950 R. R. TEETOR 2,519,859

SPEED CONTROL DEVICE FOR RESISTING OPERATION OF THE ACCELERATOR

Filed Aug. 11, 1948 2 Sheets-Sheet 1

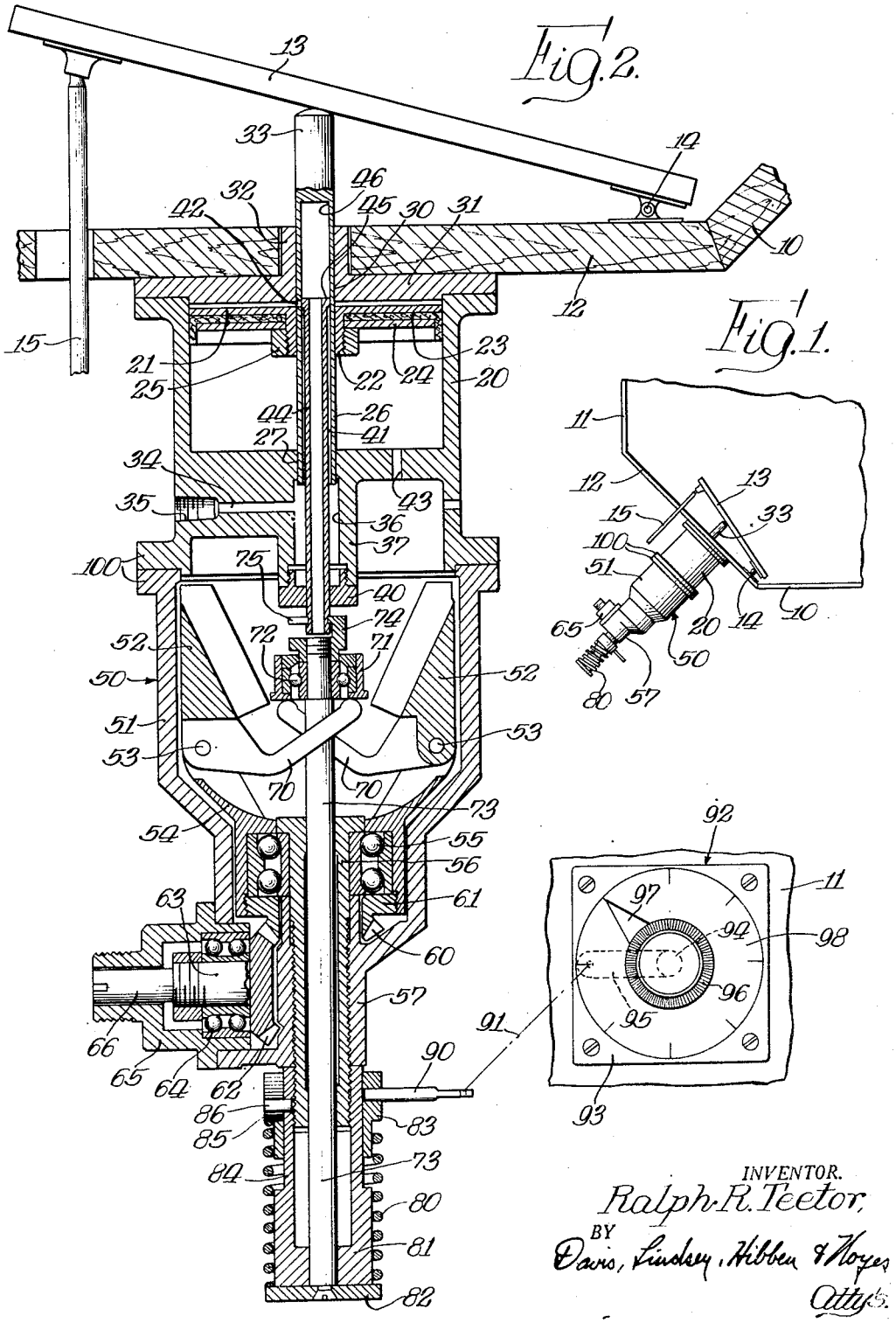

INVENTOR.
Ralph R. Teetor,
BY
Davis, Lindsey, Hibben & Noyes
Attys.