July 22, 1952 F. L. ZYBACH 2,604,359

SELF-PROPELLED SPRINKLING IRRIGATING APPARATUS

Filed June 27, 1949 3 Sheets-Sheet 1

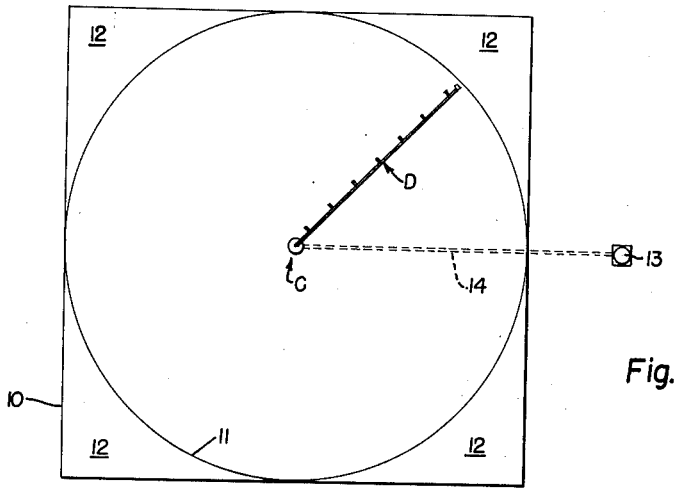

Fig. 1

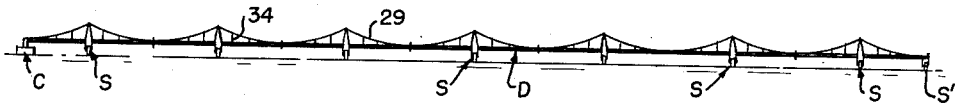

Fig. 2

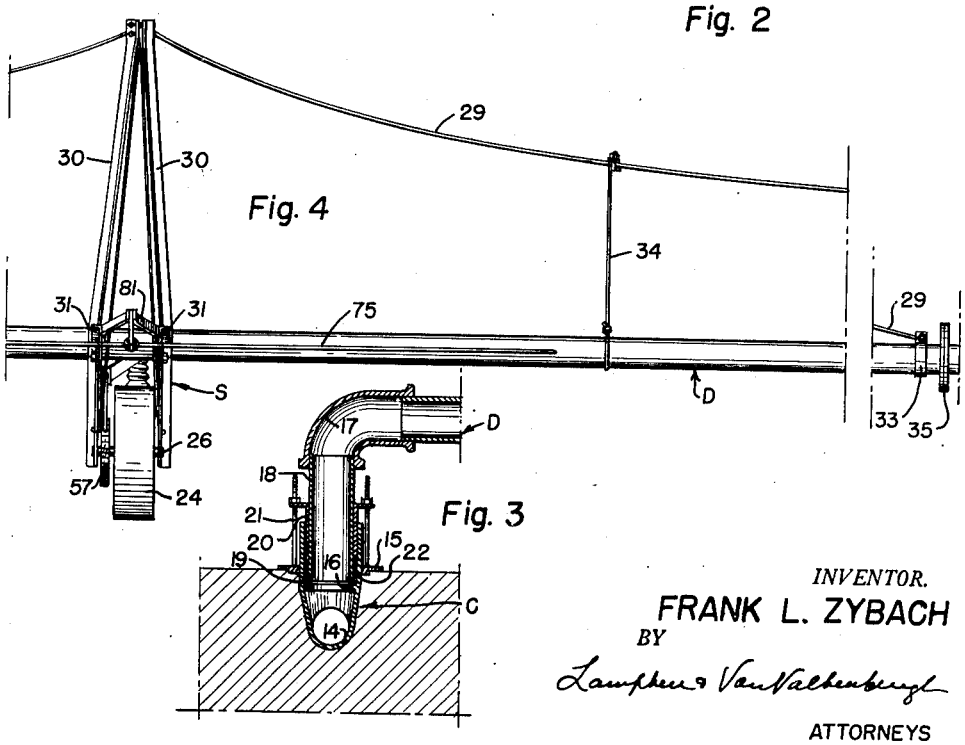

Fig. 4

Fig. 3

INVENTOR.
FRANK L. ZYBACH
BY
Lamphere & Van Valkenburgh
ATTORNEYS