4 Sheets—Sheet 1.

M. KETCHAM.

Stove.

No. 1,159.

Patented May 25, 1839.

Fig. 1.

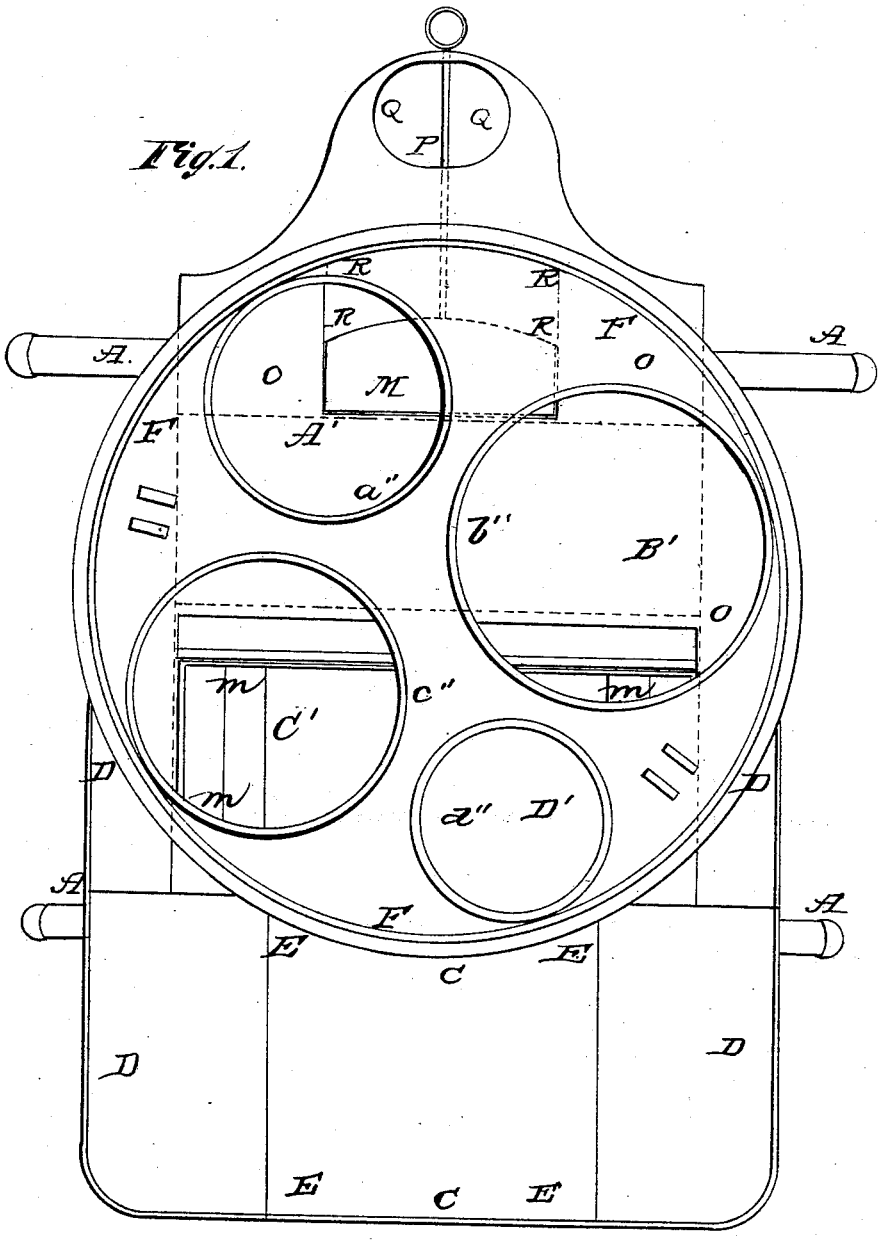

N. PETERS. Photo-Lithographer, Washington, D. C.