Fig 3

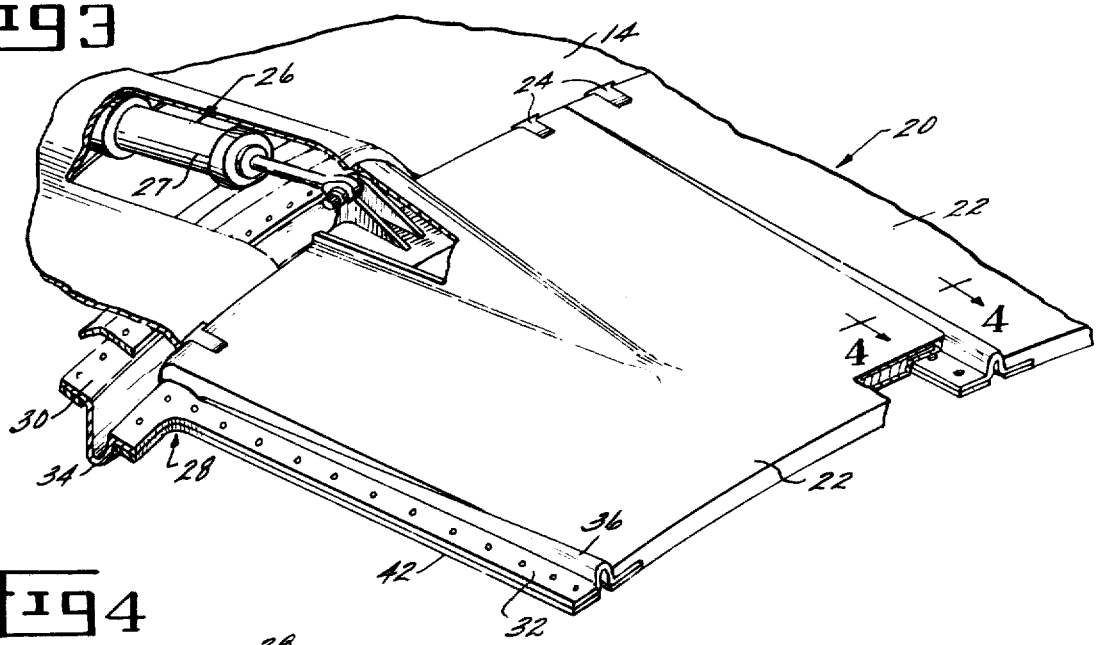

Fig 4

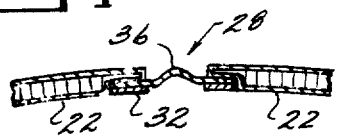

Fig 5

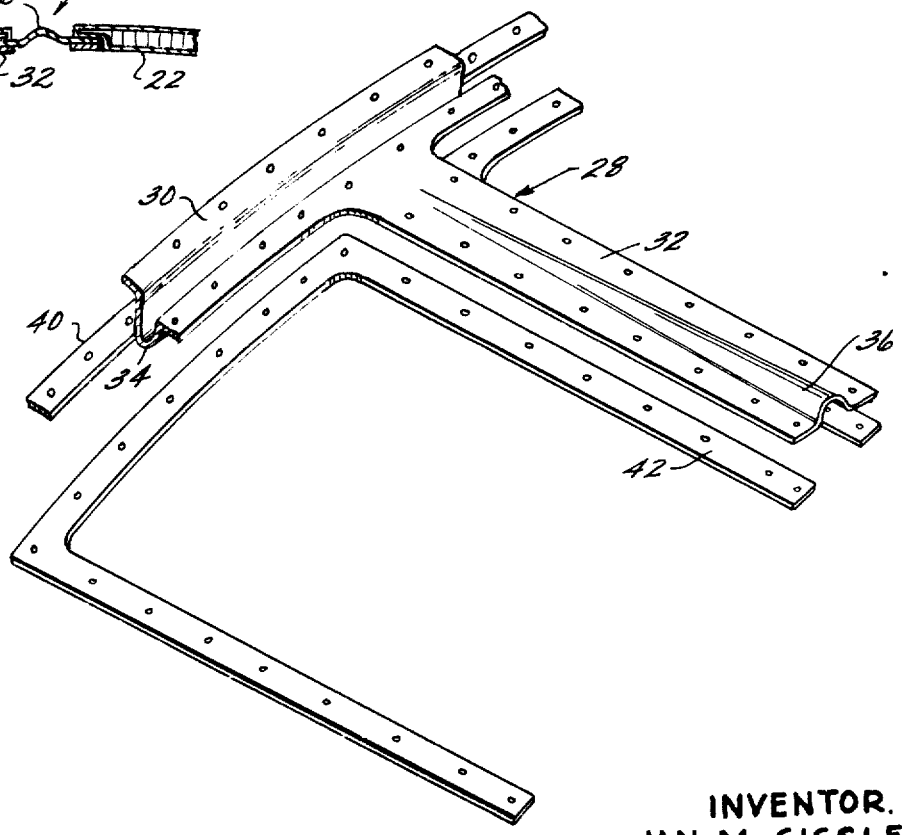

INVENTOR.
JAN M. GISSLEN

Erwin F Berrin Jr.
ATTORNEY