Jan. 16, 1940. A. A. LANE ET AL 2,187,658

AMPHIBIAN VEHICLE

Filed Nov. 3, 1937 8 Sheets-Sheet 1

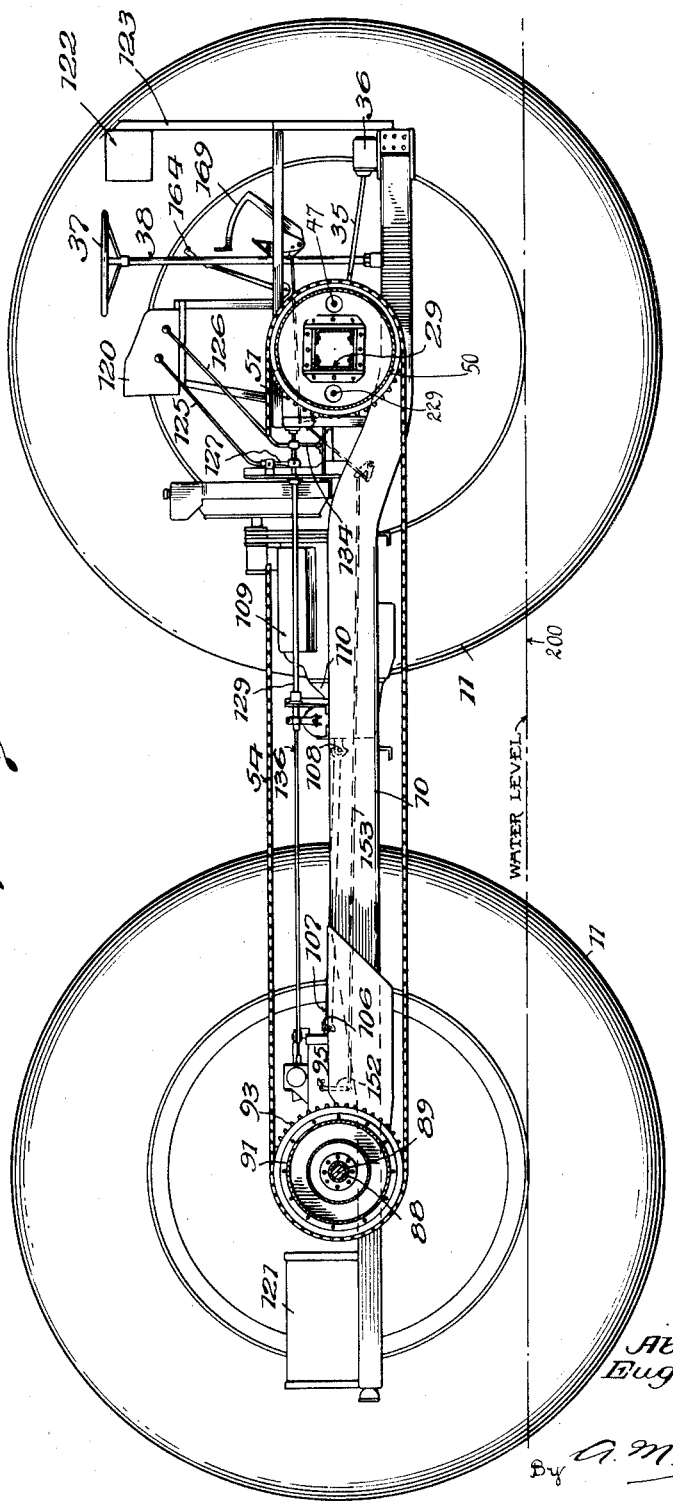

Fig. 7.

Inventors

Abbot A. Lane

Eugene W. Jacobson

By A. M. Houghton

Their Attorney