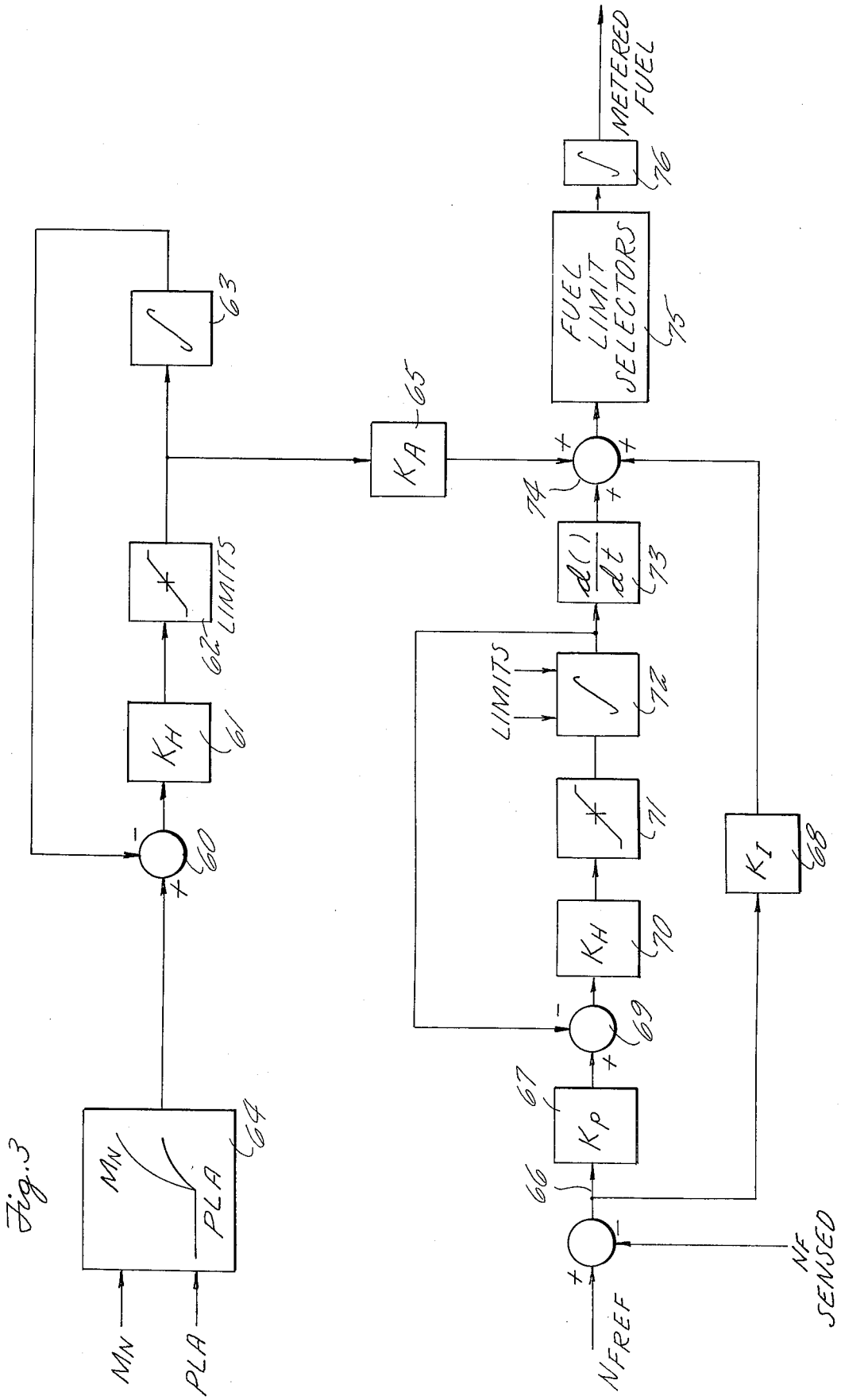
MN
PLA
MN
PLA
64
60
KH
61
LIMITS
62
63
KA
65
74
FUEL LIMIT SELECTORS
75
METERED FUEL
76
d( )/dt
73
LIMITS
72
71
KH
70
69
KP
67
66
NFREF
NF SENSED
KI
68

Fig. 3