Nov. 22, 1955 F. J. McCONNELL 2,724,258

FIRE-EXIT LOCK

Filed Sept. 21, 1950 2 Sheets-Sheet 1

FIG. 1.

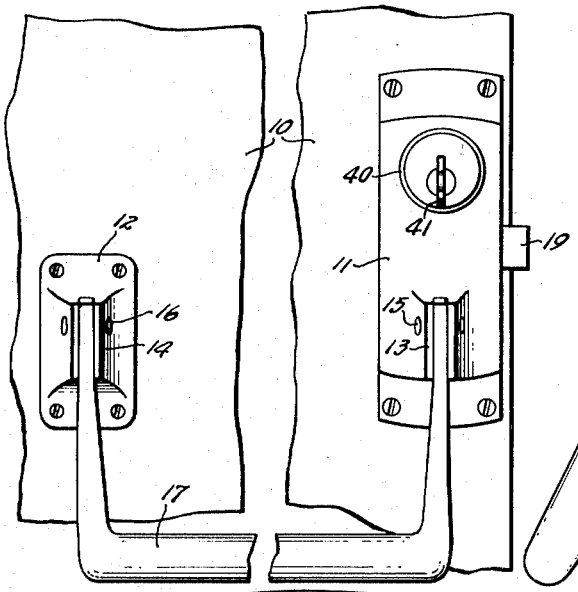

FIG. 2.

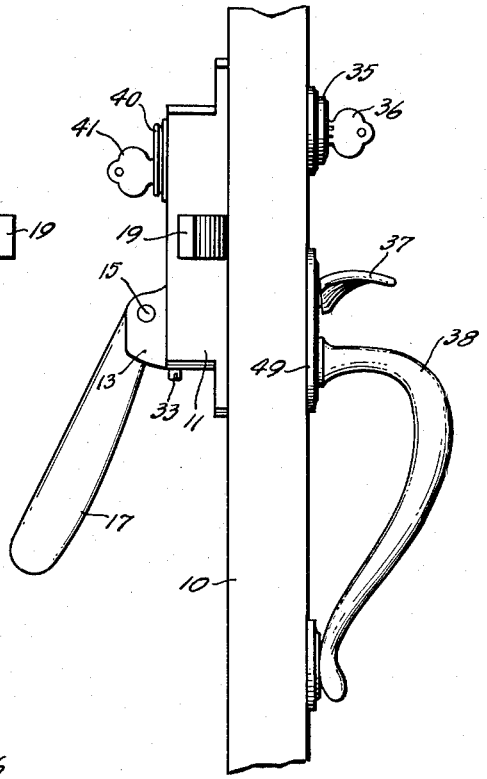

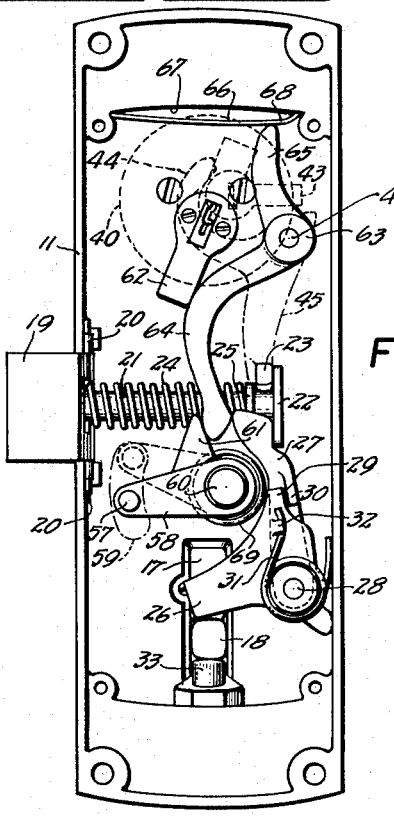

FIG. 5.

Inventor
FRANK J. McCONNELL

By Mitchell & Bechert
Attorneys