US00D712258S

(12) United States Design Patent

Grattagliano

(10) Patent No.: US D712,258 S
(45) Date of Patent: ** Sep. 2, 2014

(54) **RESEALABLE CAP**

(75) Inventor: **Reynald Vito Grattagliano**, Ft. Lauderdale, FL (US)

(73) Assignee: **Cote d'Azur Holding Ltd**, Grand Cayman (KY)

(**) Term: **14 Years**

(21) Appl. No.: **29/411,496**

(22) Filed: **Mar. 19, 2012**

(51) **LOC (10) Cl.** **09-07**

(52) **U.S. Cl.**
USPC **D9/449**; D9/446

(58) **Field of Classification Search**
USPC D9/434, 435, 438, 439, 445, 447, 449, D9/450, 454; D7/392.1, 392, 510, 511, D7/638; D3/323; 220/254.1, 257.2, 258.1, 220/270, 271, 375, 575, 715, 781; 215/254
See application file for complete search history.

(56) **References Cited**

U.S. PATENT DOCUMENTS

4,284,200	A	*	8/1981	Bush et al.	215/215
4,449,640	A	*	5/1984	Finkelstein	220/270
D286,750	S	*	11/1986	Hamilton et al.	D9/560
D318,777	S	*	8/1991	Freese	D7/392
D364,810	S	*	12/1995	Meisner	D9/446
D424,440	S	*	5/2000	Wilkinson et al.	D9/446
D469,353	S	*	1/2003	Sturk	D9/443
D475,925	S	*	6/2003	Sturk	D9/454
D522,860	S	*	6/2006	LaFortune	D9/449
D612,236	S	*	3/2010	Sturk	D9/446
7,954,659	B2	*	6/2011	Zuares et al.	220/254.7
8,235,236	B2	*	8/2012	Zuares et al.	220/254.7
2004/0256386	A1	*	12/2004	LaFortune	220/254.1

OTHER PUBLICATIONS

Scottish Spirits Imports, Inc.: "Now Scottish Spirits in a Can Comes with a Re-sealable Lid". Found online Dec. 19, 2013 at http://www.scottishspirits.com/default.html.*

* cited by examiner

Primary Examiner — Robert M Spear
(74) *Attorney, Agent, or Firm* — Malloy & Malloy, P.L.

(57) **CLAIM**

The ornamental design for a resealable cap, as shown and described.

DESCRIPTION

FIG. **1** is a front perspective view illustrating my design for a resealable cap;
FIG. **2** is a top plan view thereof;
FIG. **3** is a left side view thereof;
FIG. **4** is a bottom side view thereof;
FIG. **5** is a right side view thereof;
FIG. **6** is a top side view thereof;
FIG. **7** is a bottom plan view thereof;
FIG. **8** is a cross-sectional side view thereof;
FIG. **9** is a side view thereof illustrating an open orientation;
FIG. **10** is a bottom perspective view thereof illustrating an open orientation; and,
FIG. **11** is a top perspective view thereof illustrating an open orientation.
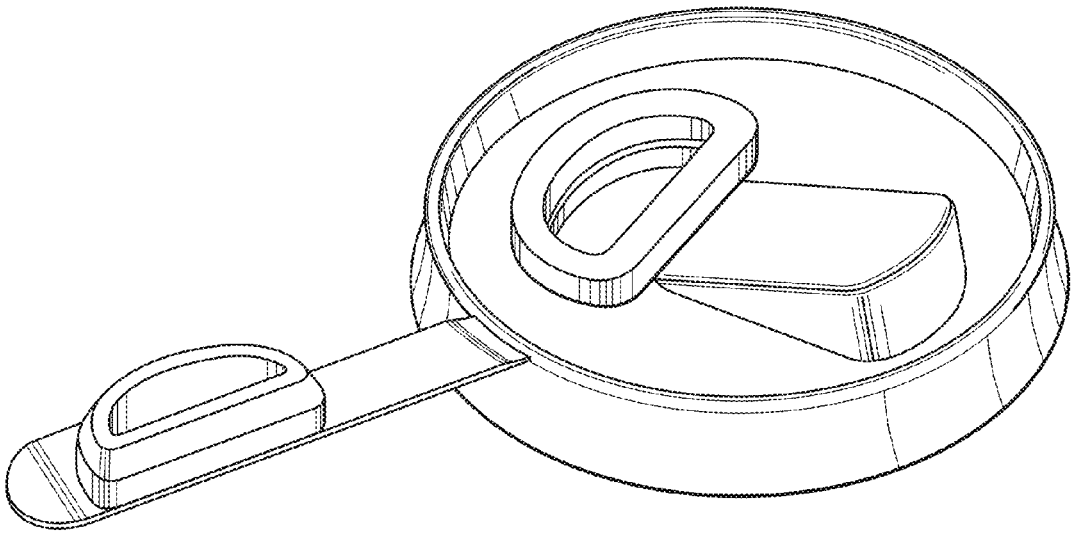
1 Claim, 8 Drawing Sheets