W. B. OLDS.

REVOLVING COAT FORM.

No. 8,858. Patented Apr. 6, 1852.

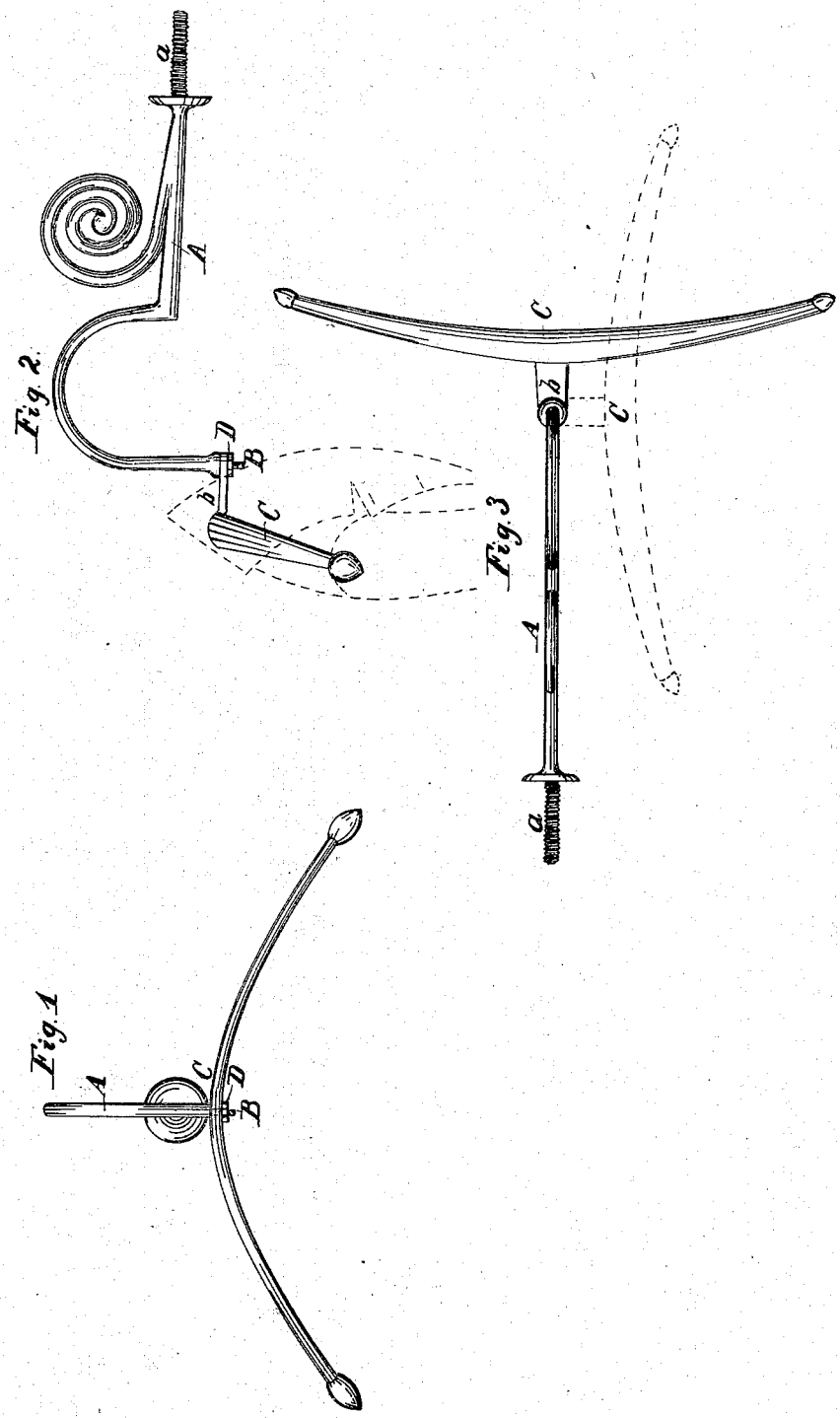

THE MORRIS PETERS CO. PHOTO LITHO., WASHINGTON, D. C.