Dec. 12, 1967 J. H. MYER 3,357,457

COLLAPSIBLE TUBULAR STRUCTURE

Filed April 30, 1964 2 Sheets-Sheet 1

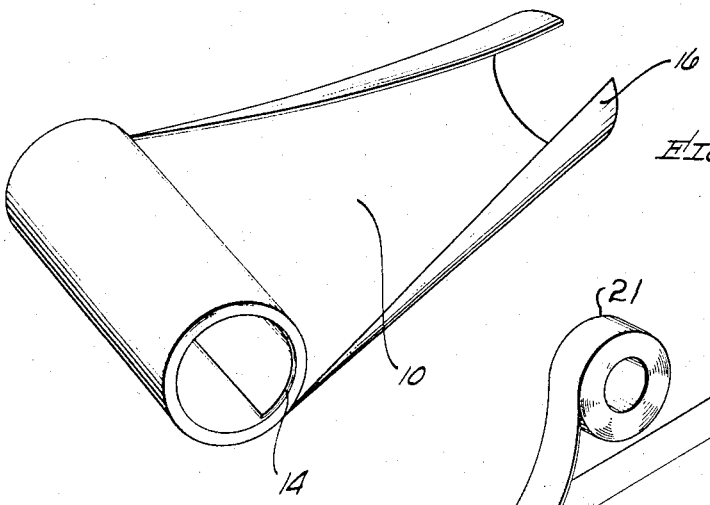

FIG. 1.

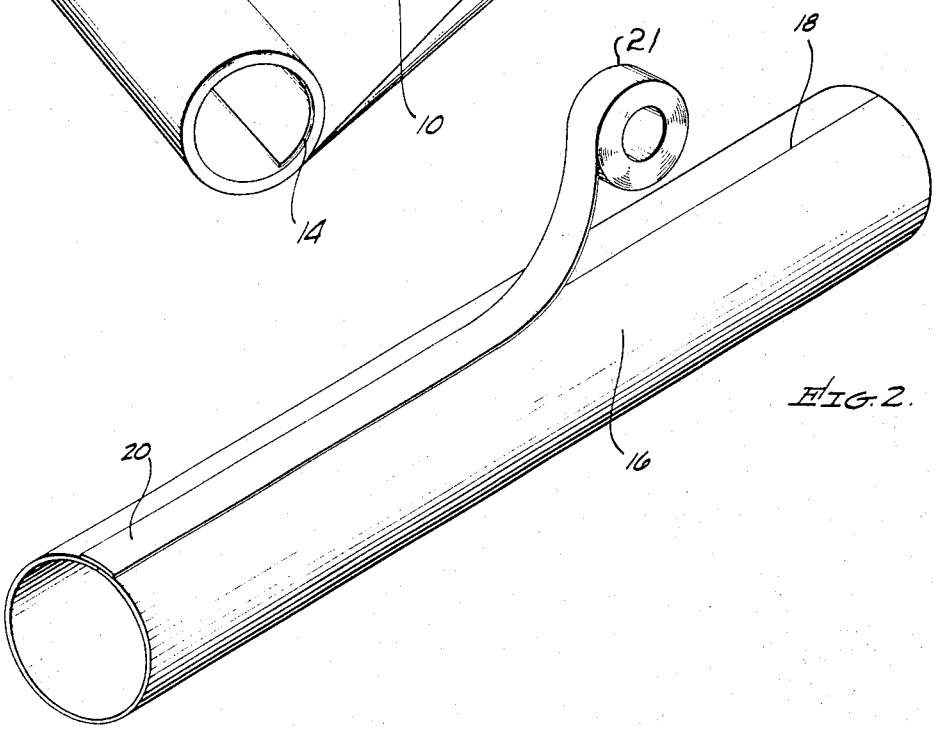

FIG. 2.

FIG. 3.

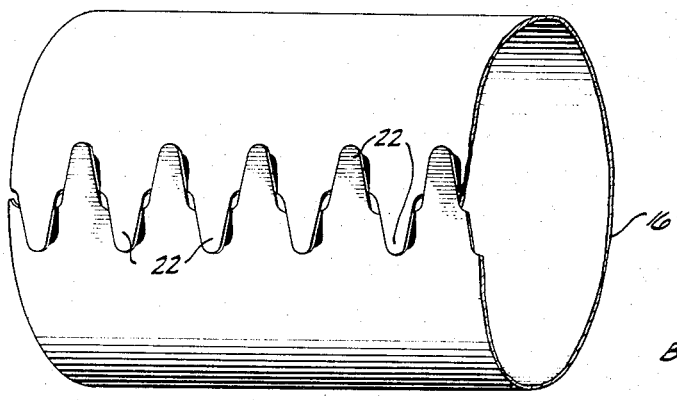

INVENTOR
JON H. MYER,
BY Walter R. Thiel
ATTORNEY.