Apr. 24, 1923. 1,453,057

J. A. WILLIAMS

PROCESS OF MAKING IRON, STEEL, OR STEEL ALLOYS

Filed Dec. 6, 1920

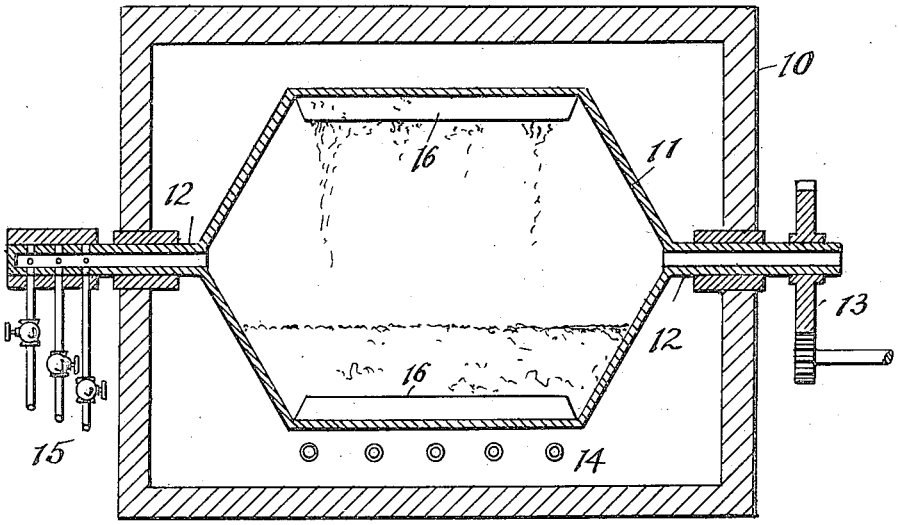

Fig. 1.

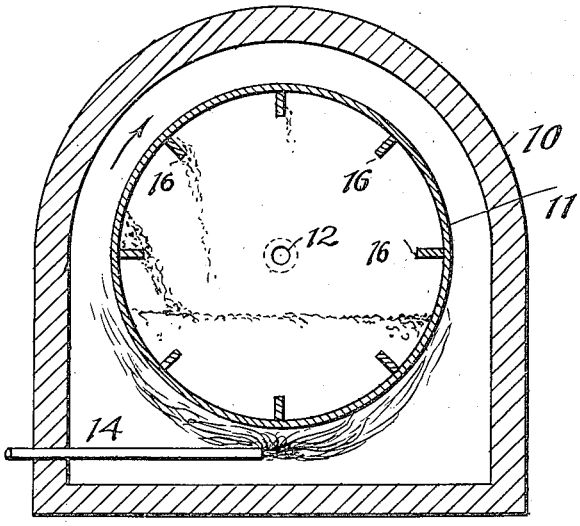

Fig. 2.

Inventor:
Joseph A. Williams
by
Thurston, Kerr & Hudson
attys