Dec. 1, 1942. J. A. NUMERO ET AL 2,303,857

AIR-CONDITIONER FOR VEHICLES

Filed Nov. 16, 1939 8 Sheets-Sheet 1

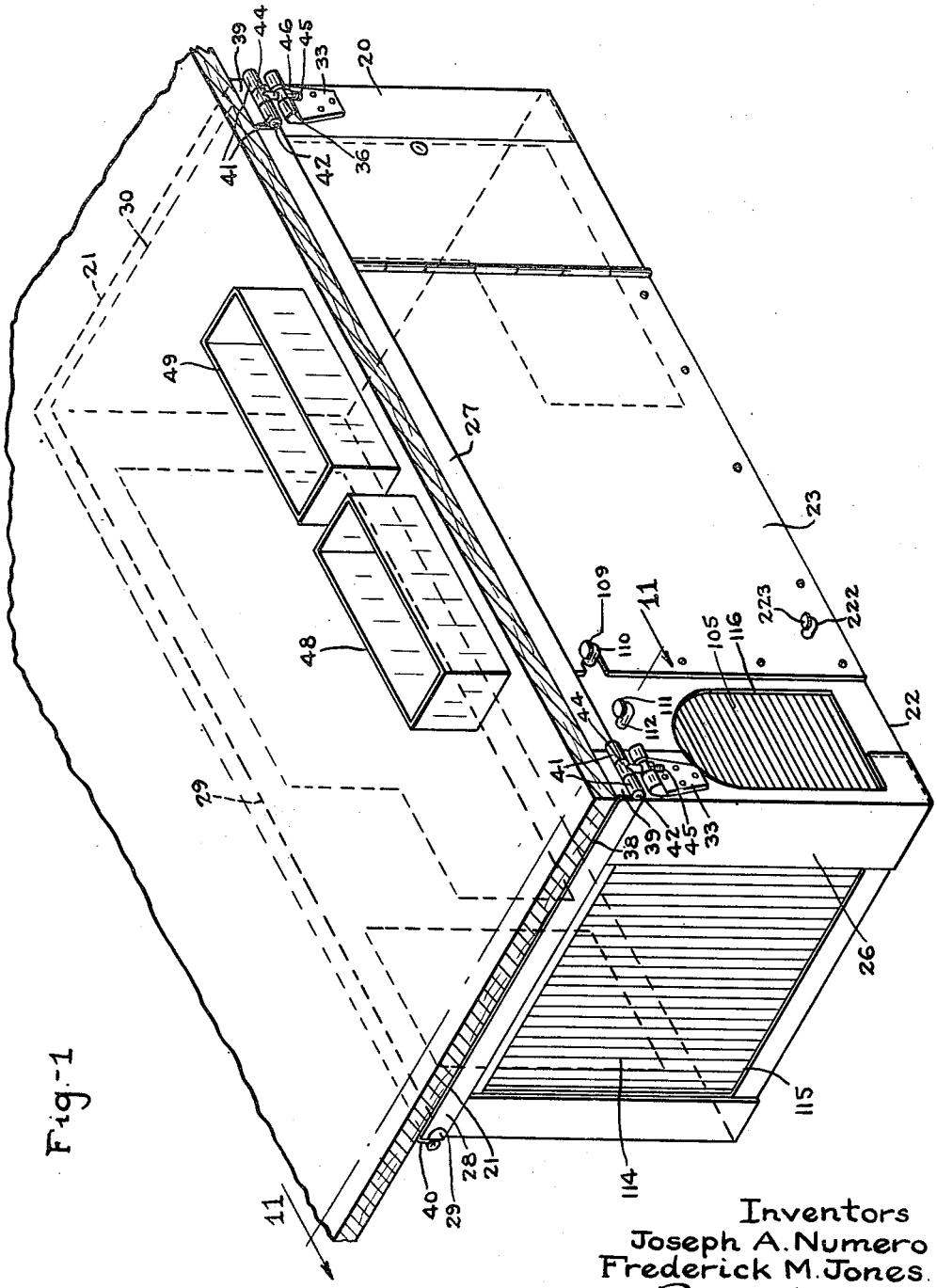

Fig. 1

Inventors
Joseph A. Numero
Frederick M. Jones
By F. A. Whiteley
Attorney