United States Patent [19]

Myer

[11] **Patent Number: 4,627,256**

[45] **Date of Patent: Dec. 9, 1986**

[54] **METHOD OF FORMING PRECISELY CURVED SURFACES**

[75] Inventor: **Jon H. Myer**, Woodland Hills, Calif.

[73] Assignee: **Hughes Aircraft Company**, Los Angeles, Calif.

[21] Appl. No.: **106,985**

[22] Filed: **Dec. 26, 1979**

[51] **Int. Cl.**[4] **B21D 26/02**; B21D 22/10

[52] **U.S. Cl.** ..... **72/60**; 29/421 R; 72/351

[58] **Field of Search** ..... 72/60, 63, 58, 59, 350, 72/351, 379, 54, 297, 378; 29/421 R

[56] **References Cited**

U.S. PATENT DOCUMENTS

15,278	7/1858	Booth	72/351
138,721	5/1873	Wilson et al.	72/351
1,881,517	10/1932	Groehn	72/350
2,285,903	6/1942	Clark	72/350
2,292,462	8/1942	Milford	72/60
2,344,743	3/1944	Smith	72/63
2,410,857	11/1946	Ahern	72/60 X
2,728,317	12/1955	Clevenger et al.	72/60
2,961,028	11/1960	Bath	72/297
3,073,373	1/1963	Wheeler et al.	72/297
3,093,086	6/1963	Altoz et al. .	
3,299,689	1/1967	Dolney	72/350 X
3,435,653	4/1969	Scaletta et al.	72/351 X
3,529,458	9/1970	Butler et al.	72/60
3,751,956	8/1973	Blanchl	72/351
4,045,986	9/1977	Laycock et al.	29/421 R
4,211,102	7/1980	Hurvitz	72/378

Primary Examiner—E. Michael Combs

Attorney, Agent, or Firm—Lewis B. Sternfels; A. W. Karambelas

[57] **ABSTRACT**

Precisely curved, lightweight and low-cost reflectors for electromagnetic radiation are fabricated by use of a tool and a process in which a blank is planar stretched by uniformly applied isotropic and radially extending forces followed by deformation of the stretched blank to a precisely curved surface.
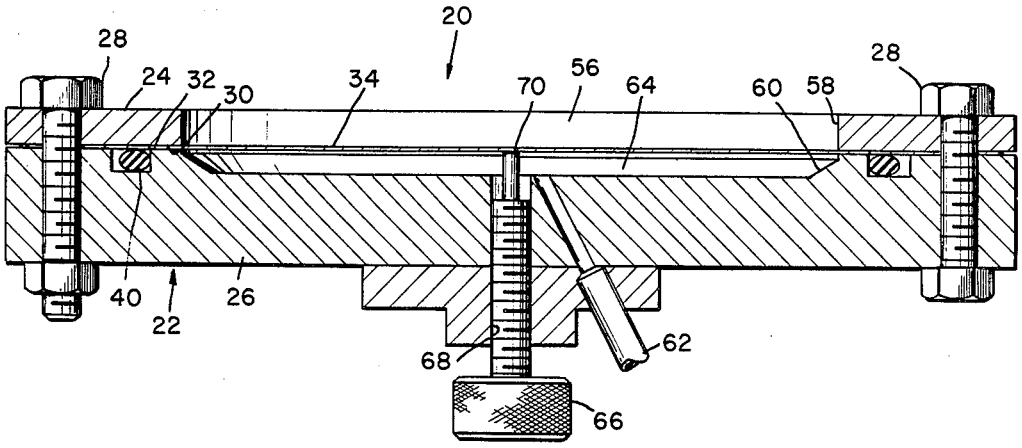
14 Claims, 15 Drawing Figures