June 10, 1952 P. F. HURT 2,599,555

AIRCRAFT ROCKET LAUNCHER

Filed March 11, 1946 5 Sheets-Sheet 1

FIG. 1

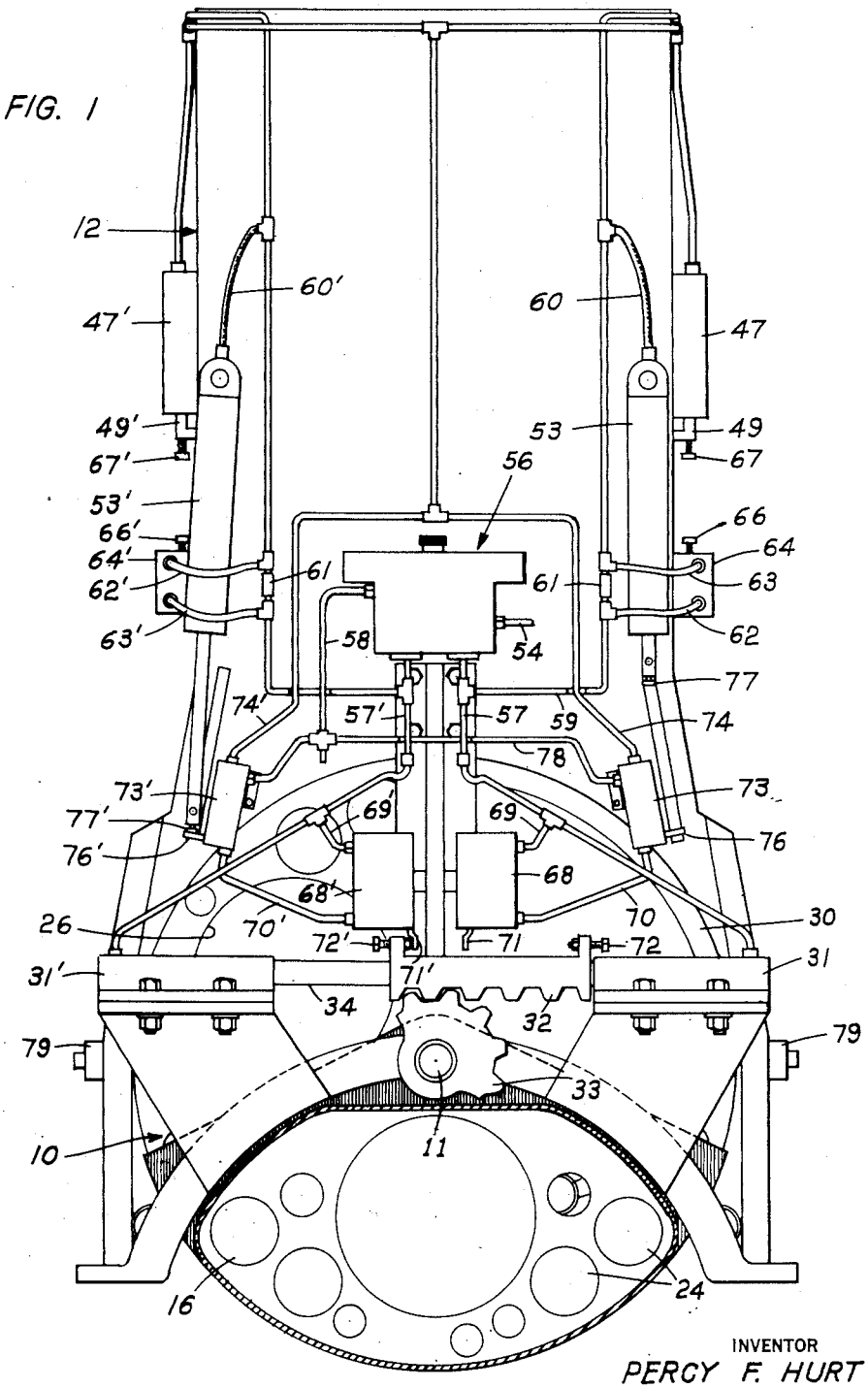

INVENTOR
PERCY F. HURT

BY

ATTORNEY