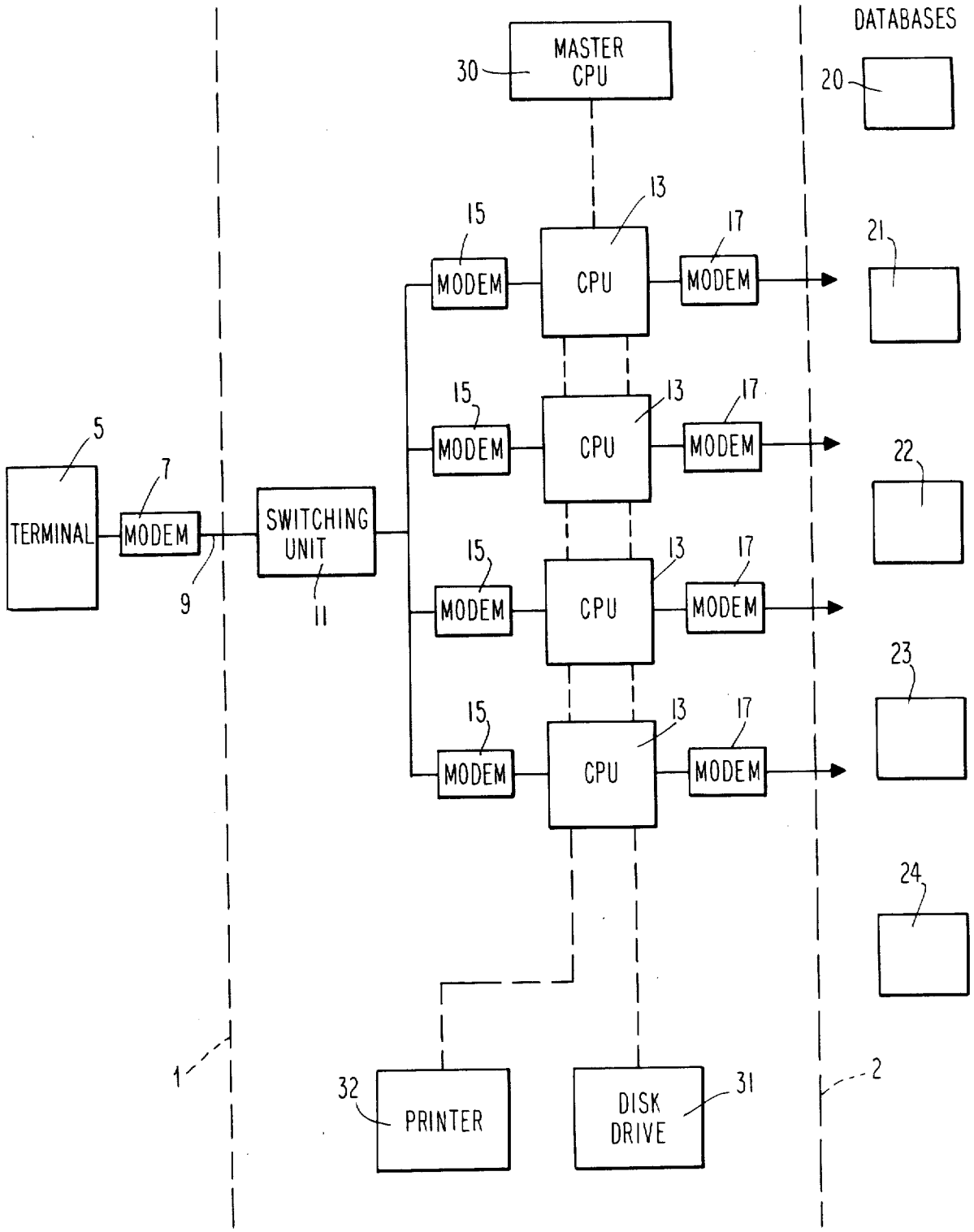
DATABASES
MASTER CPU
30
20
13
15
17
21
MODEM
CPU
MODEM
15
13
17
MODEM
CPU
MODEM
22
5
7
TERMINAL
MODEM
SWITCHING UNIT
9
11
15
13
17
MODEM
CPU
MODEM
23
15
13
17
MODEM
CPU
MODEM
24
1
32
PRINTER
DISK DRIVE
31
2

Fig. 1