M. C. SCHWEINERT AND H. P. KRAFT.

COMBINED GAGE AND COUPLING.

APPLICATION FILED AUG. 21, 1915.

1,369,555. Patented Feb. 22, 1921.

Fig. 1.

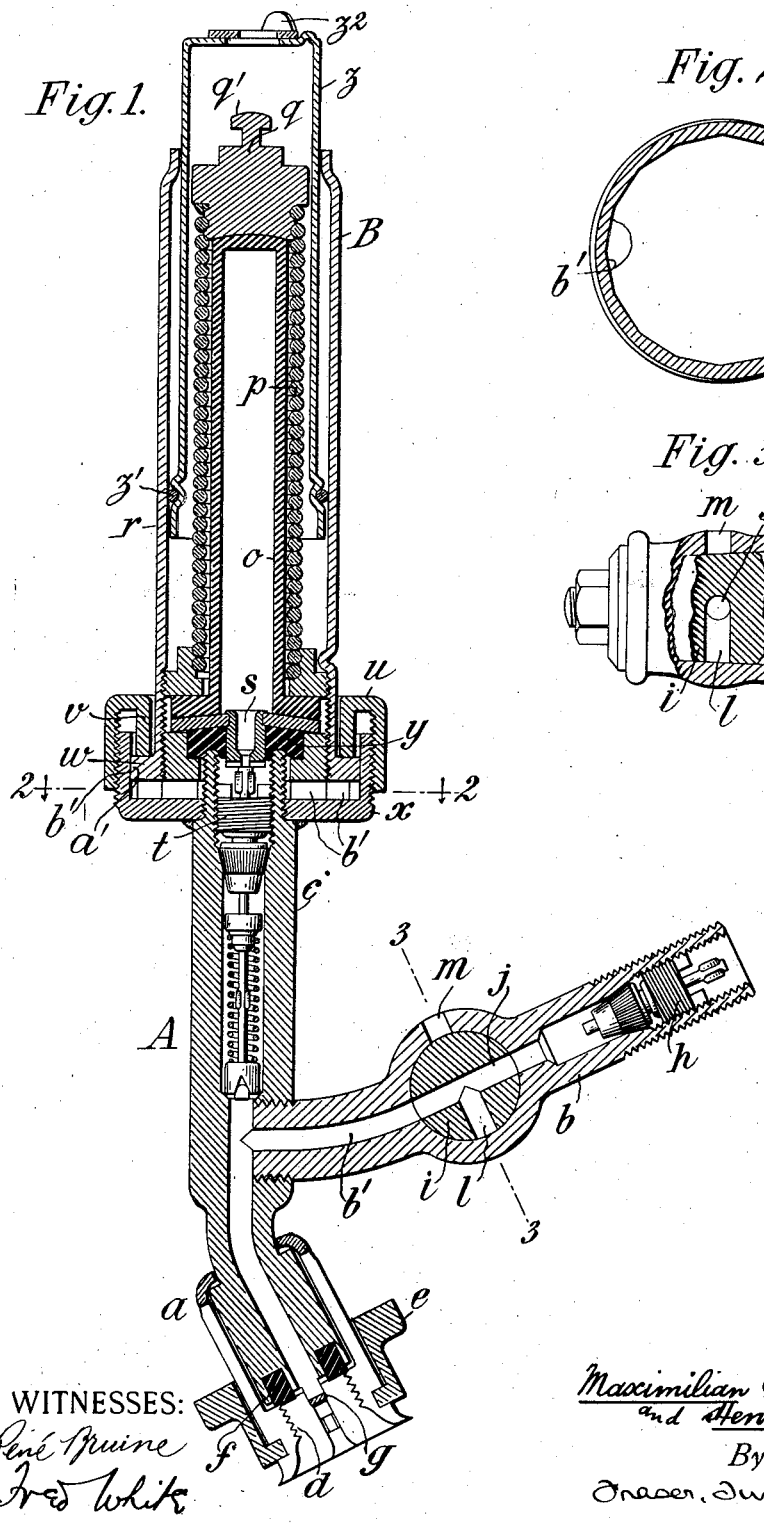

Fig. 2.

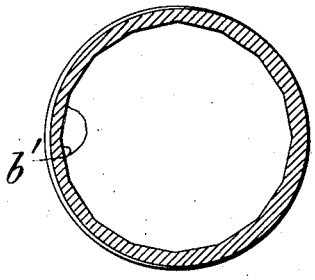

Fig. 3.

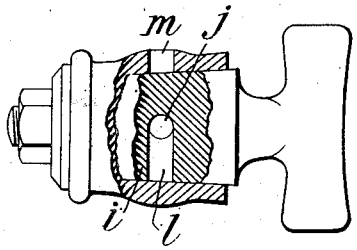

WITNESSES:
René Pruine
Fred White

INVENTORS:
Maximilian Charles Schweinert
and Henry P. Kraft,
By Attorneys,
Dreger, Dunk & Myers