US009055955B2

(12) **United States Patent**
**Ek et al.**

(10) **Patent No.: US 9,055,955 B2**
(45) **Date of Patent: *Jun. 16, 2015**

(54) **BONE RESURFACING SYSTEM AND METHOD**

(75) Inventors: **Steven W. Ek**, Bolton, MA (US); **George Sikora**, Bridgewater, MA (US)

(73) Assignee: **ArthroSurface Inc.**, Franklin, MA (US)

( * ) Notice: Subject to any disclaimer, the term of this patent is extended or adjusted under 35 U.S.C. 154(b) by 970 days.

This patent is subject to a terminal disclaimer.

(21) Appl. No.: **13/037,929**

(22) Filed: **Mar. 1, 2011**

(65) **Prior Publication Data**

US 2011/0152869 A1 Jun. 23, 2011

**Related U.S. Application Data**

(63) Continuation of application No. 12/397,095, filed on Mar. 3, 2009, now Pat. No. 7,896,883, which is a continuation-in-part of application No. 12/027,121, filed on Feb. 6, 2008, now Pat. No. 8,177,841, which is

(Continued)

(51) **Int. Cl.**
***A61B 17/16*** (2006.01)
***A61B 17/56*** (2006.01)
(Continued)

(52) **U.S. Cl.**
CPC ..... ***A61B 17/1764*** (2013.01); *A61B 17/1635* (2013.01); *A61B 17/1742* (2013.01);
(Continued)

(58) **Field of Classification Search**
CPC ..... A61B 17/1764; A61B 17/1635; A61B 2017/1778; A61B 2017/1775; A61B 17/1742; A61F 2/30756; A61F 2/3859; A61F 2/461; A61F 2/4657; A61F 2/4684; A61F 2002/30112; A61F 2002/30607; A61F 2002/3085; A61F 2002/3895; A61F 2002/4658; A61F 2002/4663; A61F 2002/4685; A61F 2230/0004; A61F 2250/0062
USPC ..... 606/79, 80, 86 R, 87–89, 90, 96, 97, 606/102, 104; 623/20.14
See application file for complete search history.

(56) **References Cited**

U.S. PATENT DOCUMENTS

103,645 A 5/1870 Muscroft
992,819 A 5/1911 Springer
(Continued)

FOREIGN PATENT DOCUMENTS

AU 2001262308 12/2001
AU 2001259327 B2 2/2005
(Continued)

OTHER PUBLICATIONS

Bale, MD, Reto J., et al, "Osteochondral Lesions of the Talus: Computer=assisted Retrograde Drilling Feasibility and Accuracy in Initial Experiences", (Radiology. 2001;218:278-282) © RSNA, 2001.

(Continued)

*Primary Examiner* — Pedro Philogene
(74) *Attorney, Agent, or Firm* — Grossman Tucker Perreault & Pfleger PLLC

(57) **ABSTRACT**

The present disclosure relates to bone resurfacing. One embodiment includes a method for preparing an implant site in bone, comprising establishing a first working axis extending from said bone; establishing a second working axis extending from said bone, the second working axis is displaced from the first working axis; creating a first socket in the bone by reaming about the first working axis; and creating a second socket in the bone, adjacent the first socket, by reaming about the second working axis.
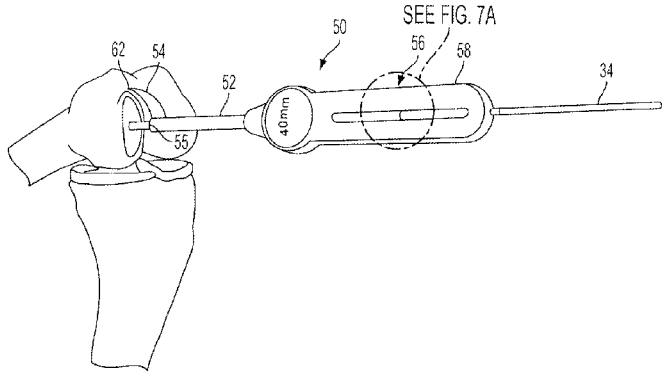
**20 Claims, 39 Drawing Sheets**