June 12, 1956 E. T. OLIVEIRA 2,749,555

DATE HAT

Filed May 18, 1955

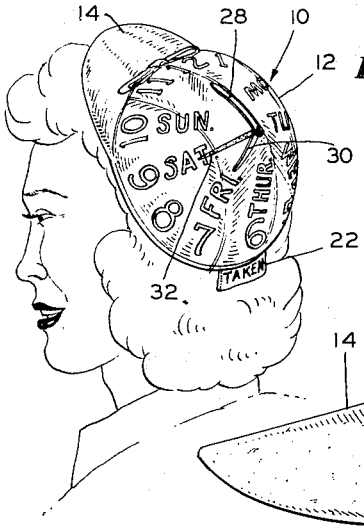

FIG. 1.

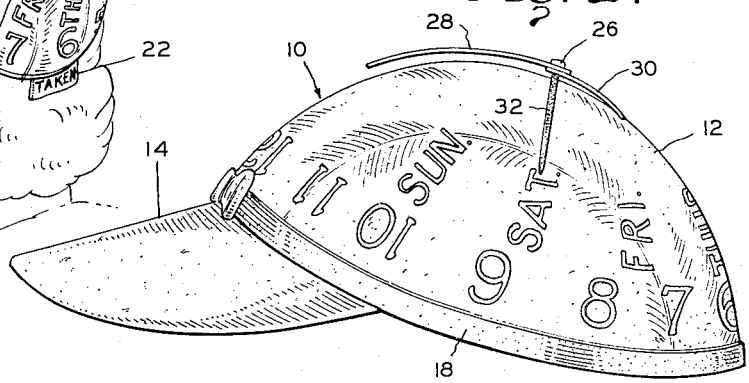

FIG. 2.

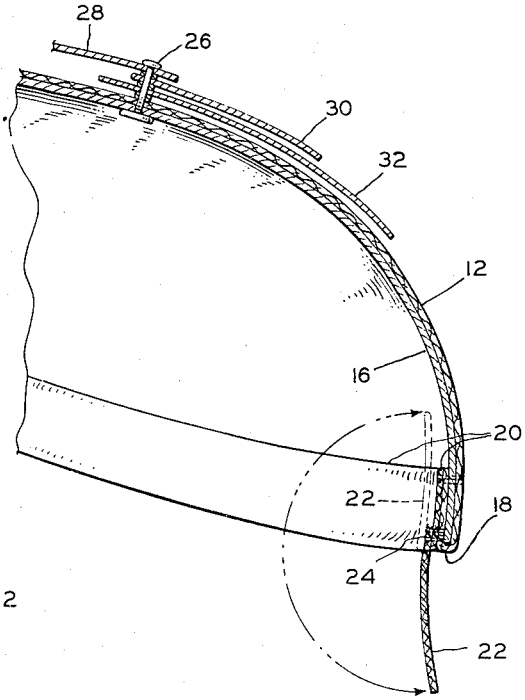

FIG. 3.

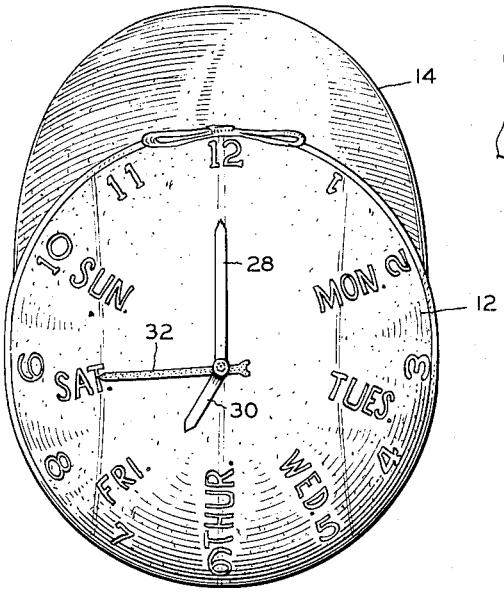

FIG. 4.

•INVENTOR

Edward T. Oliveira.

BY Gustav Miller,

ATTORNEY