J. A. WILLIAMS.

CIRCUIT BREAKER FOR IGNITION SYSTEMS.

APPLICATION FILED MAR. 3, 1916.

1,244,155.

Patented Oct. 23, 1917.

2 SHEETS—SHEET 2.

Fig. 5.

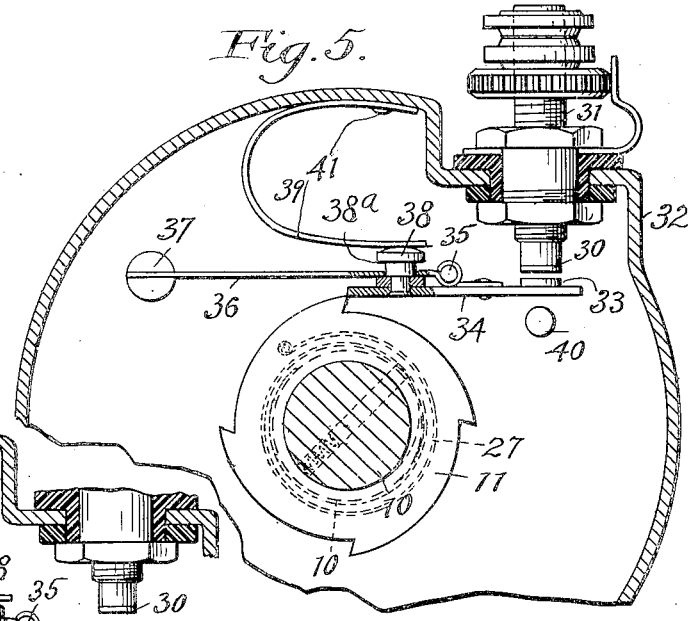

Fig. 7.

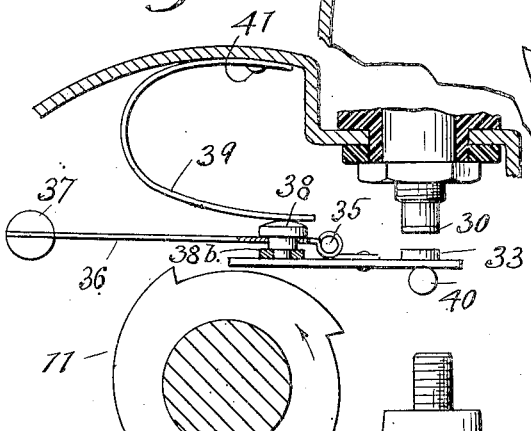

Fig. 8.

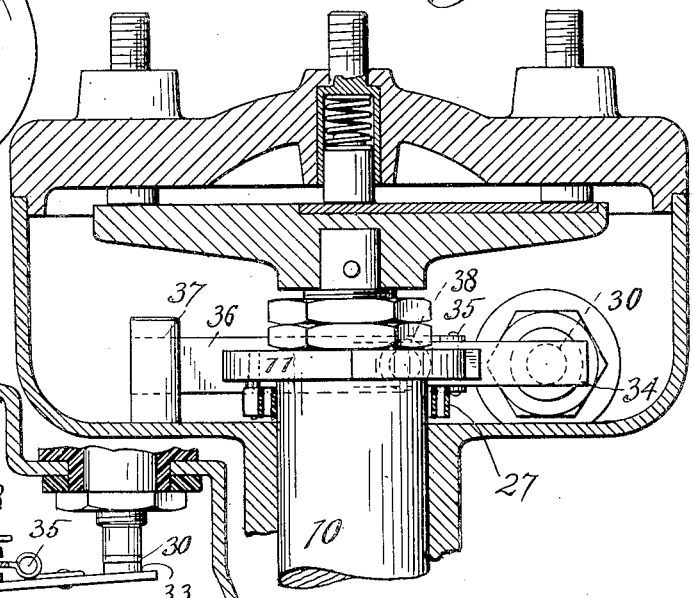

Fig. 6.

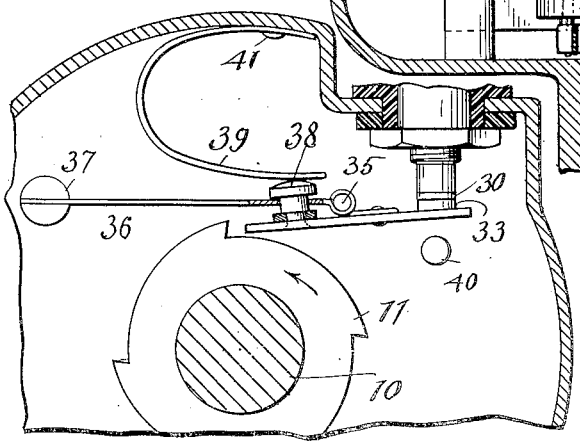

Inventor:
Joseph A. Williams
by Thurston & Lewis
Attys.