J. A. WILLIAMS.

CIRCUIT BREAKER FOR IGNITION SYSTEMS.

APPLICATION FILED MAR. 3, 1916.

1,244,155.

Patented Oct. 23, 1917.

2 SHEETS—SHEET 1.

Fig. 3.

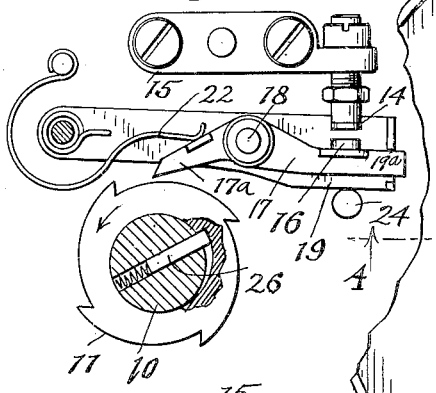

Fig. 1.

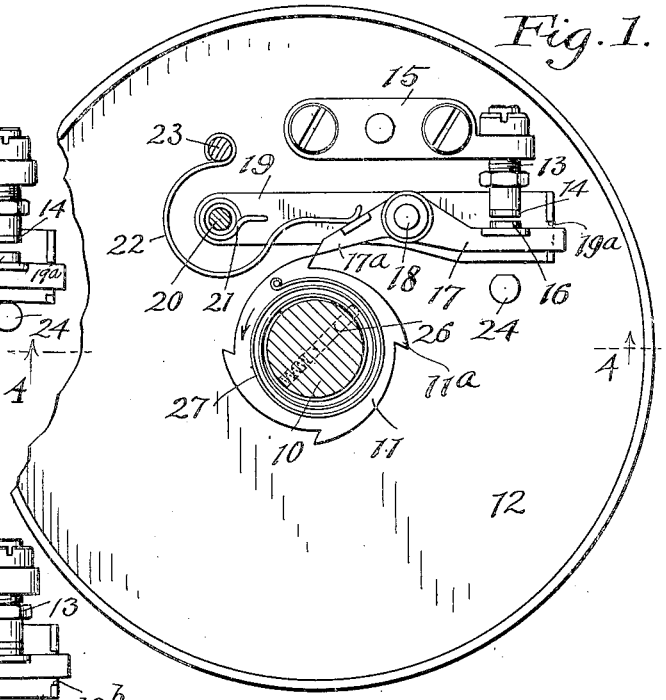

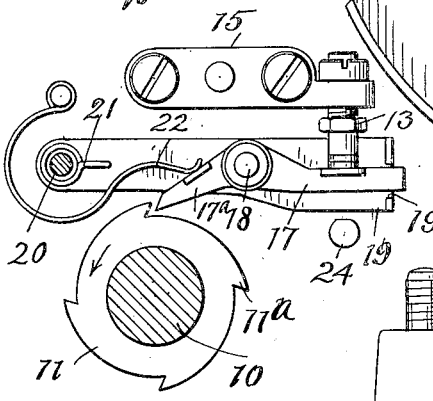

Fig. 2.

Fig. 4.

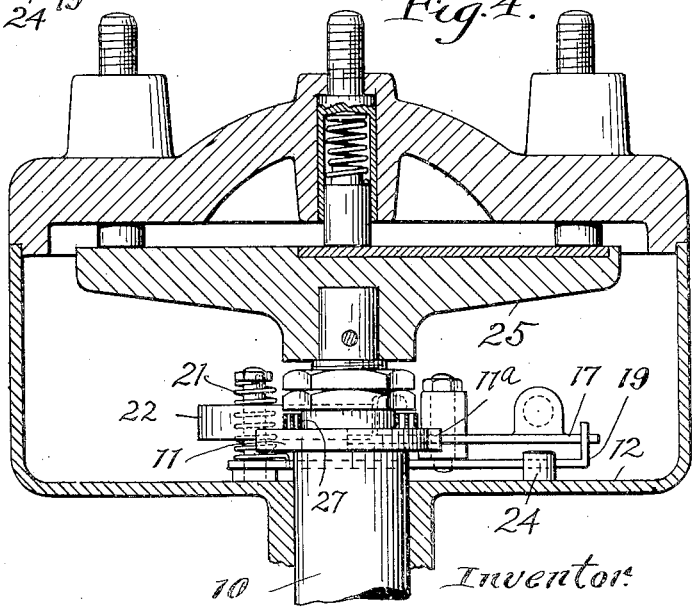

Inventor:

Joseph A. Williams.

by Thurston & Kwis

Attys.