FIG. 1

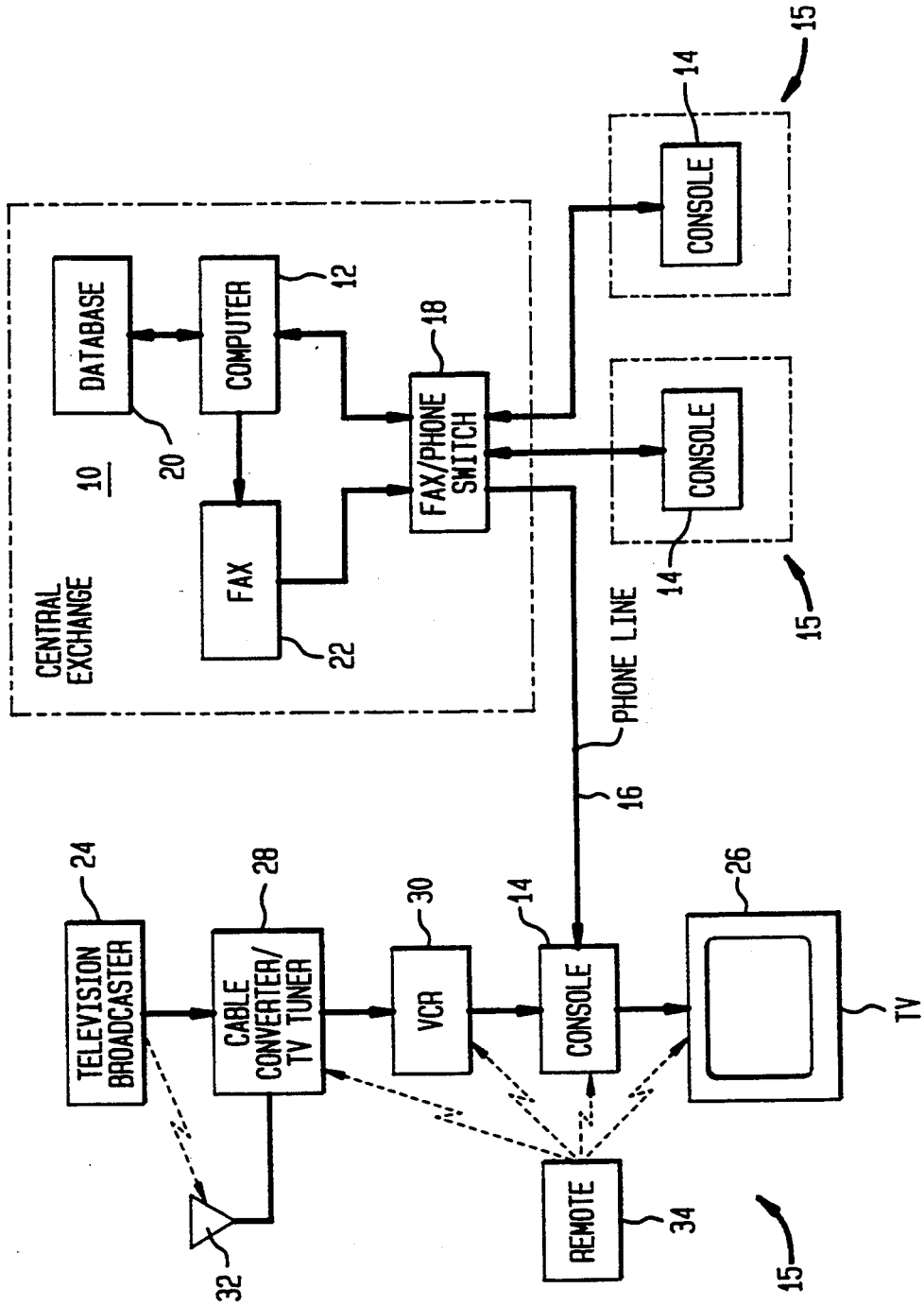
CENTRAL EXCHANGE
10
DATABASE
20
COMPUTER
12
FAX
22
FAX/PHONE SWITCH
18
CONSOLE
14
15
CONSOLE
14
15
PHONE LINE
16
TELEVISION BROADCASTER
24
CABLE CONVERTER/ TV TUNER
28
VCR
30
CONSOLE
14
TV
26
REMOTE
34
15
32