SELF-ALIGNING PLANETARY GEARING

Filed Nov. 4, 1955 2 Sheets-Sheet 2

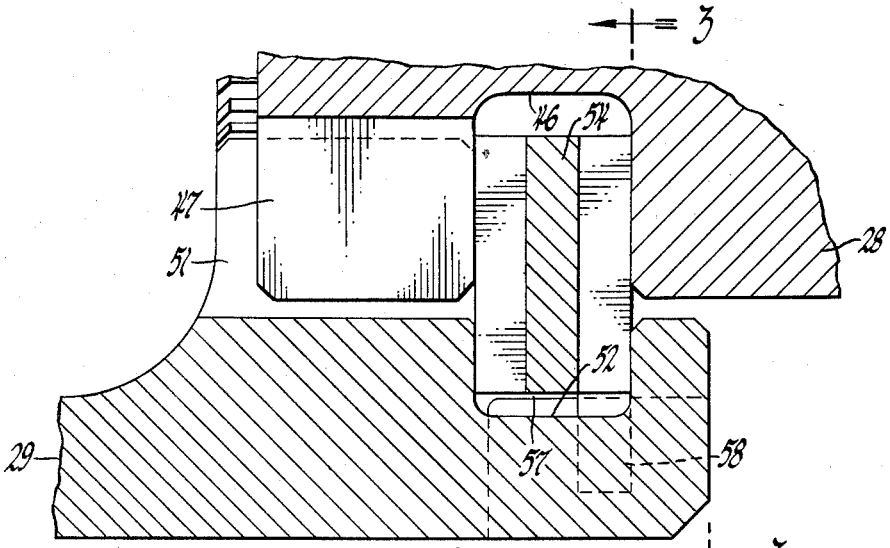

Fig. 2

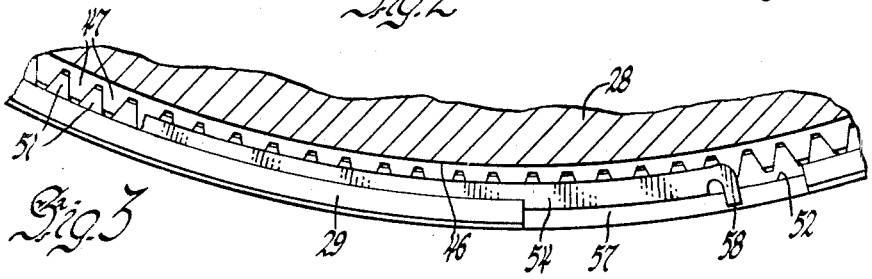

Fig. 3

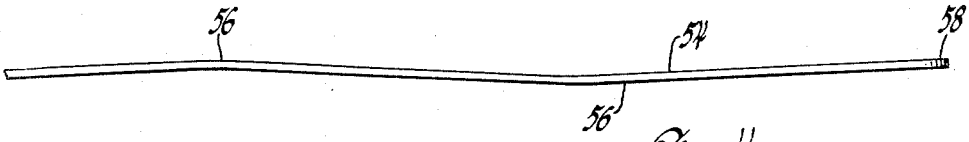

Fig. 4

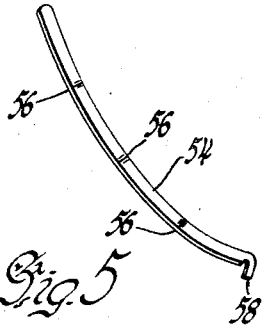

Fig. 5

Inventors
Victor W. Peterson
& Paul Bancel
By Paul Fitzpatrick
Attorney