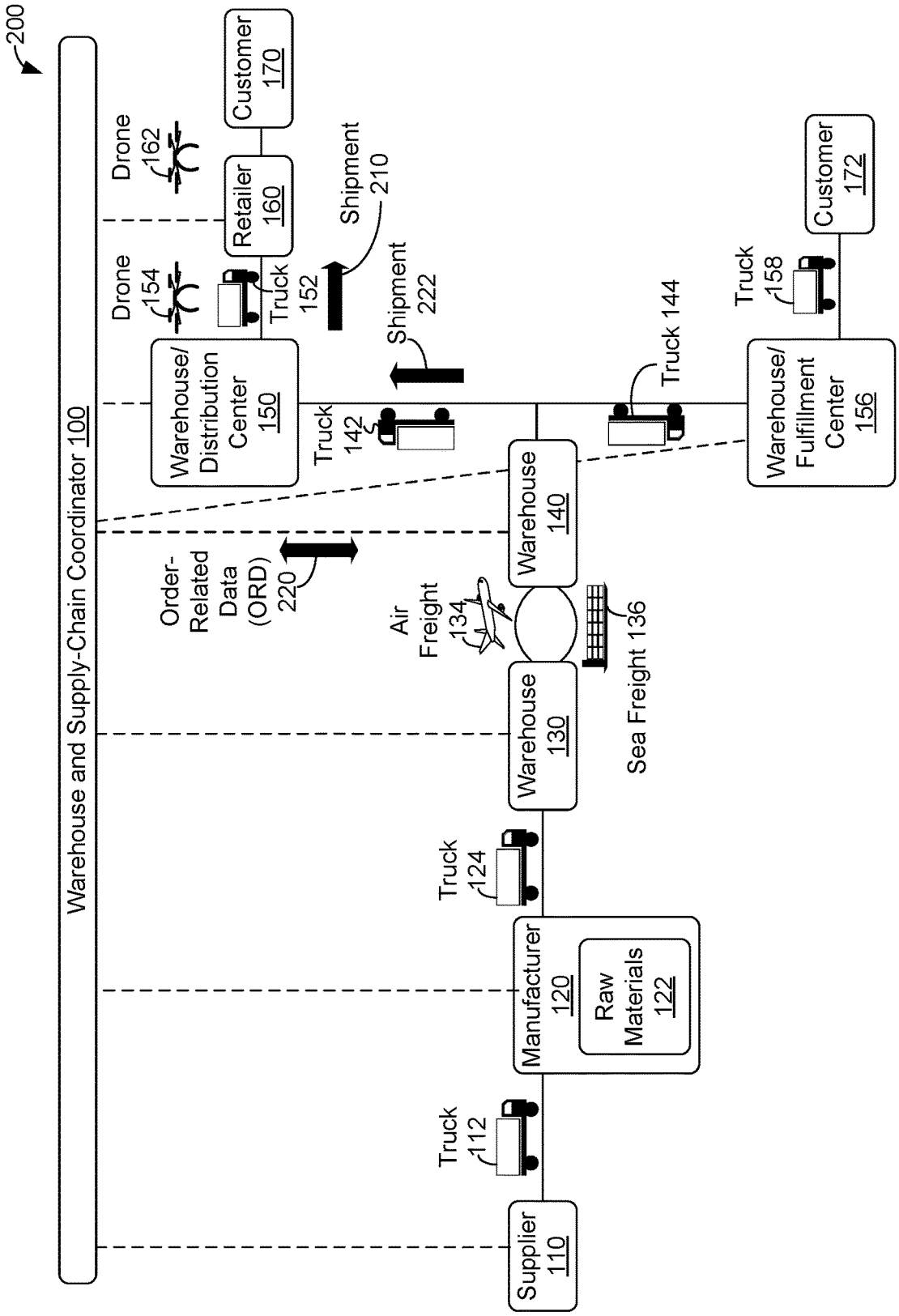
200
Warehouse and Supply-Chain Coordinator 100
Customer 170
Drone 162
Retailer 160
Shipment 210
Drone 154
Truck 152
Shipment 222
Warehouse/ Distribution Center 150
Truck 142
Truck 144
Truck 158
Customer 172
Warehouse/ Fulfillment Center 156
Warehouse 140
Order-Related Data (ORD) 220
Air Freight 134
Sea Freight 136
Warehouse 130
Truck 124
Manufacturer 120
Raw Materials 122
Truck 112
Supplier 110

FIG. 2