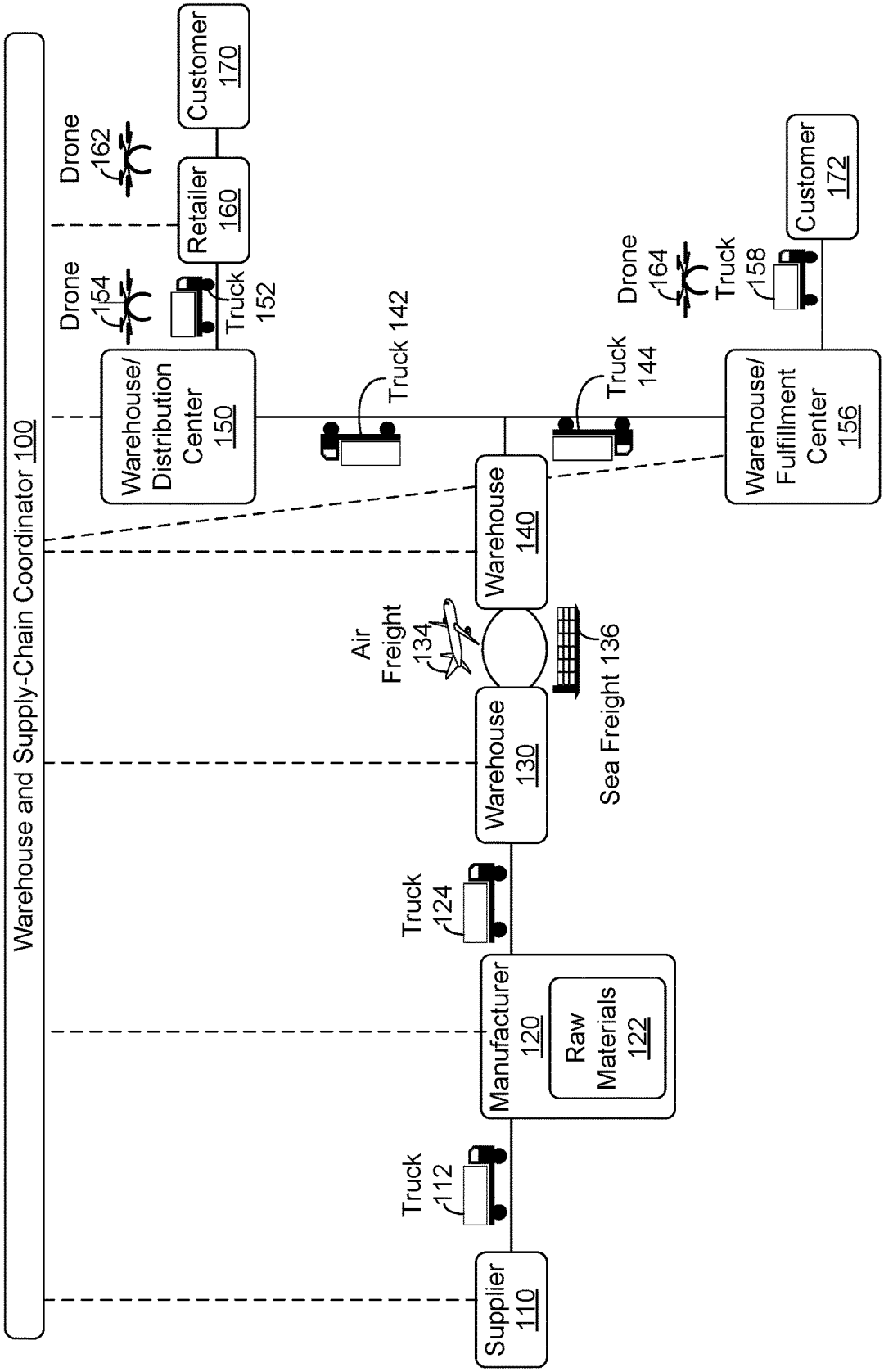
Warehouse and Supply-Chain Coordinator 100
Customer 170
Drone 162
Retailer 160
Drone 154
Truck 152
Warehouse/ Distribution Center 150
Truck 142
Drone 164
Truck 158
Customer 172
Truck 144
Warehouse/ Fulfillment Center 156
Warehouse 140
Air Freight 134
Sea Freight 136
Warehouse 130
Truck 124
Manufacturer 120
Raw Materials 122
Truck 112
Supplier 110

FIG. 1