US009622255B2

(12) **United States Patent**
Padden et al.

(10) **Patent No.: US 9,622,255 B2**
(45) **Date of Patent: Apr. 11, 2017**

(54) **NETWORK TRAFFIC PRIORITIZATION**

(75) Inventors: **Joseph Padden**, Boulder, CO (US); **Jennifer Andreoli-Fang**, Boulder, CO (US)

(73) Assignee: **Cable Television Laboratories, Inc.**, Louisville, CO (US)

(*) Notice: Subject to any disclaimer, the term of this patent is extended or adjusted under 35 U.S.C. 154(b) by 1234 days.

(21) Appl. No.: **13/537,707**

(22) Filed: **Jun. 29, 2012**

(65) **Prior Publication Data**

US 2014/0003336 A1 Jan. 2, 2014

(51) **Int. Cl.**

H04W 72/10	(2009.01)
H04L 29/08	(2006.01)
H04W 84/12	(2009.01)
H04W 28/18	(2009.01)
H04W 74/08	(2009.01)
H04L 12/801	(2013.01)

(52) **U.S. Cl.**

CPC ***H04W 72/10*** (2013.01); ***H04L 67/322*** (2013.01); ***H04W 28/18*** (2013.01); ***H04W 74/0875*** (2013.01); *H04L 47/14* (2013.01); *H04W 84/12* (2013.01)

(58) **Field of Classification Search**

None

See application file for complete search history.

(56) **References Cited**

U.S. PATENT DOCUMENTS

6,704,932	B1 *	3/2004	Matsunaga	H04L 12/44 348/E7.071
2003/0200306	A1 *	10/2003	Park	H04L 12/2803 709/224
2004/0071154	A1 *	4/2004	Wentink	H04L 12/40143 370/448
2006/0034248	A1 *	2/2006	Mishra	H04L 1/1628 370/349
2007/0217378	A1 *	9/2007	Moorti	H04L 1/1607 370/338
2008/0117836	A1 *	5/2008	Savoor	H04L 41/0896 370/254
2009/0252053	A1 *	10/2009	Leith	H04W 24/10 370/252
2009/0279427	A1 *	11/2009	Ji	H04W 74/0816 370/230
2010/0182959	A1 *	7/2010	Cook	H04M 11/062 370/329
2012/0224484	A1 *	9/2012	Babiarz	H04L 41/5019 370/235
2013/0051318	A1 *	2/2013	Matsuo	H04B 15/02 370/328
2013/0208607	A1 *	8/2013	Abraham	H04W 74/0816 370/252
2013/0301631	A1 *	11/2013	Hegde	H04W 16/14 370/345

* cited by examiner

Primary Examiner — Ayaz Sheikh
Assistant Examiner — Mariela Vidal Carpio
(74) *Attorney, Agent, or Firm* — Great Lakes Intellectual Property, PLLC.

(57) **ABSTRACT**

Network prioritization is contemplated. The network prioritization may relate to prioritizing consumption of network services as a function of user priority. The user priority may be associated with the devices desiring consumption of network services in order to ensure higher priority users are granted network resources over lower priority users.
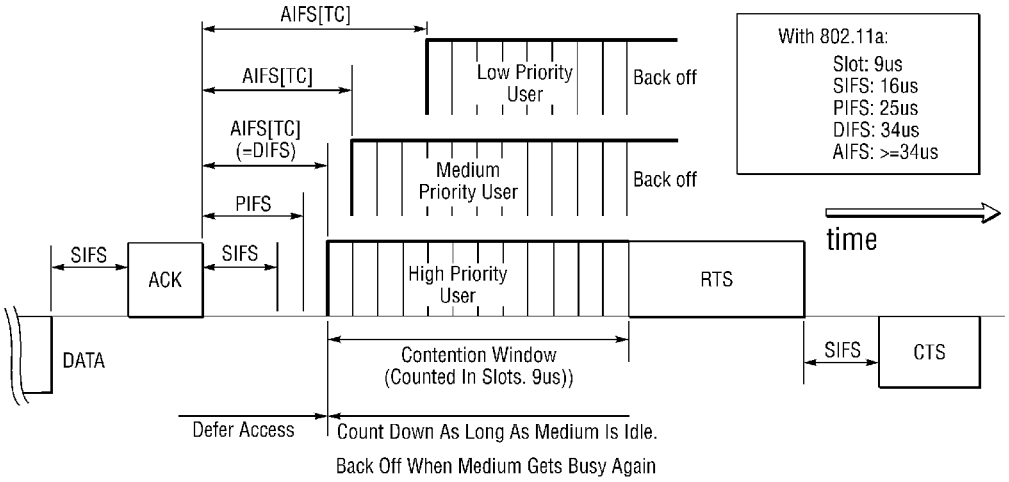
18 Claims, 3 Drawing Sheets