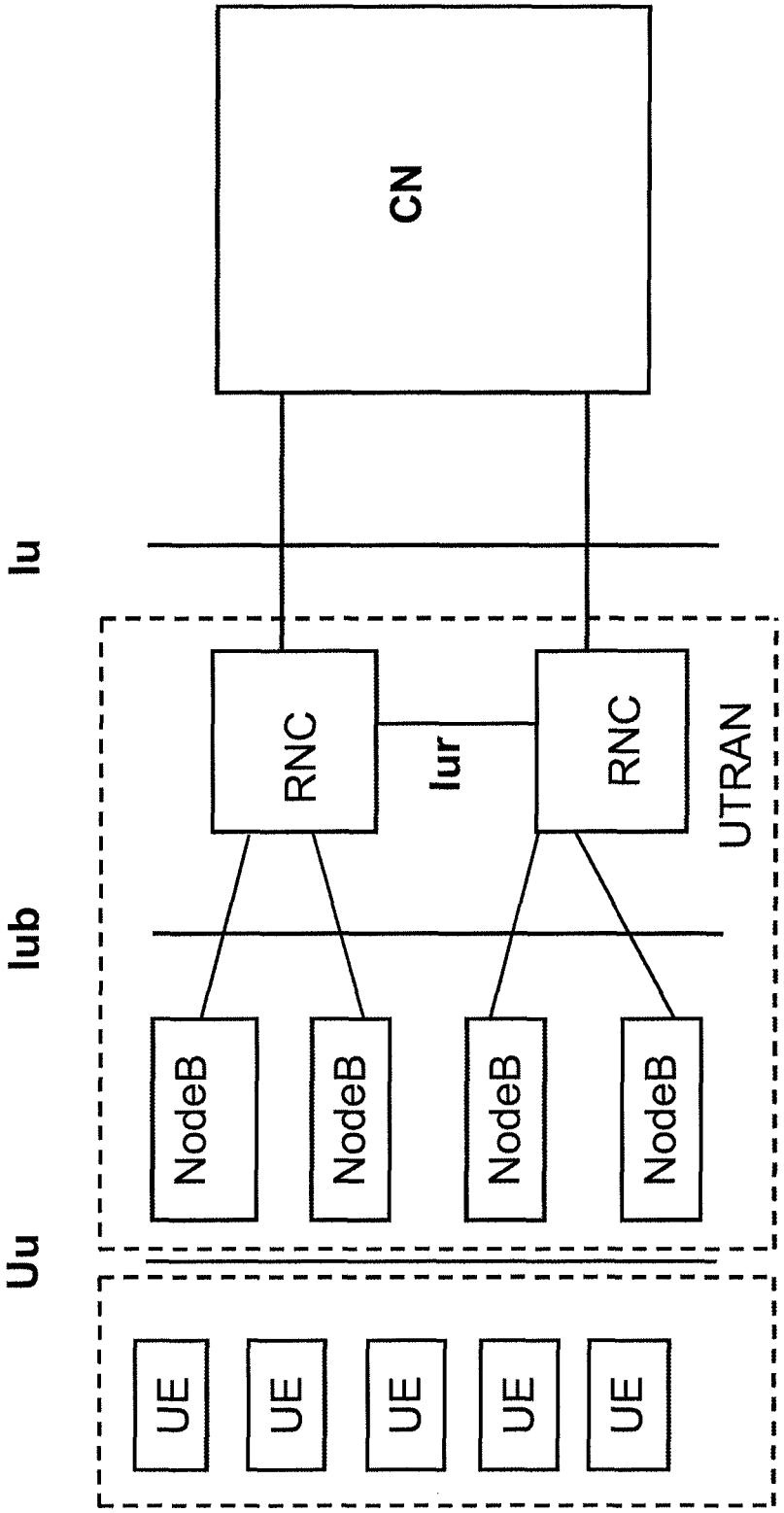

FIG. 1
(PRIOR ART)