US007051654B2

(12) **United States Patent**
Boland et al.

(10) **Patent No.: US 7,051,654 B2**
(45) **Date of Patent: May 30, 2006**

(54) **INK-JET PRINTING OF VIABLE CELLS**

(75) Inventors: **Thomas Boland**, Suwanee, GA (US); **William Crisp Wilson, Jr.**, Easley, SC (US); **Tao Xu**, Clemson, SC (US)

(73) Assignee: **Clemson University**, Clemson, SC (US)

(*) Notice: Subject to any disclaimer, the term of this patent is extended or adjusted under 35 U.S.C. 154(b) by 248 days.

(21) Appl. No.: **10/666,836**

(22) Filed: **Sep. 17, 2003**

(65) **Prior Publication Data**

US 2004/0237822 A1 Dec. 2, 2004

Related U.S. Application Data

(60) Provisional application No. 60/474,469, filed on May 30, 2003.

(51) **Int. Cl.**
B41J 2/17 (2006.01)

(52) **U.S. Cl.** **101/483**; 347/146; 435/4; 435/29

(58) **Field of Classification Search** 101/483; 347/46, 10, 12, 16, 19, 23, 58; 600/407; 435/7.2, 435/29, 395, 397; 463/164
See application file for complete search history.

(56) **References Cited**

U.S. PATENT DOCUMENTS

4,247,279	A		1/1981	Masters
4,291,992	A		9/1981	Barr et al.
4,585,139	A		4/1986	Bronson et al.
4,594,597	A		6/1986	Liu et al.
4,646,106	A		2/1987	Howkins
4,665,492	A		5/1987	Masters
4,673,304	A		6/1987	Liu et al.
4,772,141	A		9/1988	Sanders, Jr. et al.
4,889,438	A		12/1989	Forsyth et al.
4,896,980	A		1/1990	Sanders, Jr. et al.
4,921,365	A		5/1990	Sanders, Jr. et al.
4,948,280	A		8/1990	Sanders, Jr. et al.
4,969,758	A		11/1990	Sanders, Jr. et al.
4,980,112	A		12/1990	Masters
5,016,121	A		5/1991	Peddle et al.
5,039,297	A		8/1991	Masters
5,040,911	A		8/1991	Sanders, Jr. et al.
5,075,805	A		12/1991	Peddle et al.
5,134,569	A		7/1992	Masters
5,204,055	A		4/1993	Sachs et al.
5,216,616	A		6/1993	Masters
5,490,962	A		2/1996	Cima et al.
5,492,937	A		2/1996	Bogentoft et al.
5,546,313	A		8/1996	Masters
5,599,695	A		2/1997	Pease et al.
5,605,662	A		2/1997	Heller et al.
5,658,802	A		8/1997	Hayes et al.
5,694,324	A		12/1997	Masters et al.
5,702,717	A		12/1997	Cha et al.
5,739,832	A		4/1998	Heinzl et al.
5,797,898	A		8/1998	Santini, Jr. et al.
5,798,779	A	*	8/1998	Nakayasu et al. 347/46
5,831,070	A		11/1998	Pease et al.

(Continued)

OTHER PUBLICATIONS

Article—*Cell and Organ Printing 1: Protein and Cell Printers*, W. Cris Wilson, Jr. and Thomas Boland, The Anatomical Record Part A, vol. 272A, 2003, pp. 491–496.

(Continued)

Primary Examiner—Eugene H. Eickholt
(74) *Attorney, Agent, or Firm*—Dority & Manning, P.A.

(57) **ABSTRACT**

A method for forming an array of viable cells is provided. In one embodiment, the method comprises ink-jet printing a cellular composition containing cells onto a substrate. Upon printing, at least about 25% of the cells remain viable after incubation for 24 hours at 37° C. in a 5% CO_2/95% O_2 environment.
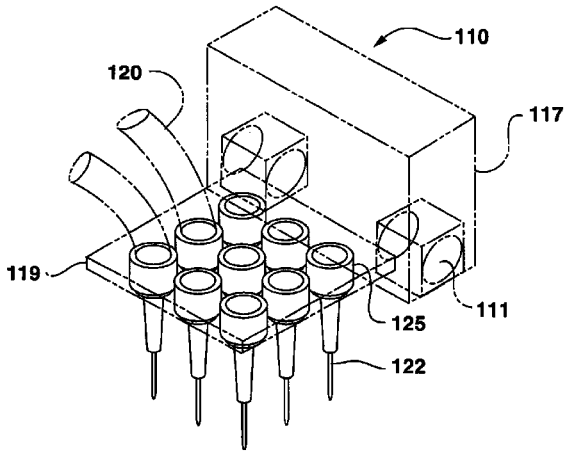
90 Claims, 14 Drawing Sheets